EASTERN JUNGLE GYM

Dreamscape

Owners & Instruction Manual

This instruction booklet is to be used exclusively for Eastern Jungle Gym customers only. It is not to be handed out to the general public. Any duplication of this booklet will be subject to copyright protection and federal laws.

version 1.2022

EASTERN JUNGLE GYM

IMPORTANT INFORMATION
PLEASE READ...

It is important for you to go through your boxes and check all material, hardware and wood prior to assembly. Please familiarize yourself with the material. It is very helpful to read and review this instruction booklet. This will help ensure you assemble your Jungle Gym properly, safely and more efficiently.
A little time now can save you time when your assembling!

If you have any missing parts, damaged material, or have any questions installing your new Eastern Jungle Gym product. Please call Eastern Jungle Gym directly.

Customer Service available 9-5pm EST Mon-Fri call 1-800-752-9787
or Email-Info@easternjunglegym.com

Do not contact or go to the retailer you purchased your new Eastern Jungle Gym from.

EASTERN JUNGLE GYM

Play Safely Instructions

1) Do **NOT** let children play on your Eastern Jungle Gym product until it is fully and safely assembled.

2) Review all safety points with children prior to letting them play.

3) Adult supervision is recommended for children of all ages.

4) Warn children from playing, walking or running in front of or behind any moving objects.

5) Warn children from twisting on the swings this can weaken product and could result in damage.

6) Do **NOT** to attach any objects to the Swing Set such as clothes lines, jump ropes or any other rope as this may cause strangulation hazards.

7) Warn children from pushing empty swing equipment, twisting chain or ropes or jumping off any moving swing equipment or deck. DO NOT use any part of the swing set in a manner that it is not intended for.

8) Warn children from playing on swing set if it is wet this can cause parts of swing set to become slippery.

9) Warn children only one person on a swing at a time. (except Glider)

10) Warn children that anything other than sitting on swings is dangerous and can cause serious injury. Never stand or kneel on swings.

11) Warn children to not loop chains over any object this may cause the chain to weaken.

12) Children should not wear any loose clothing while playing such as scarfs and hats with strings or any other very baggy clothes. This can create hazzards.

Choosing a Location to Assemble your Eastern Jungle Gym

When selecting a your Eastern Jungle Gym location site keep in mind the child's safety. Here are some recommendations to help you create a safe play area.

1) The swing set should be located on fairly level ground. The stationary components such as ladders, rock walls and slides are recommended to be a minimum of 6 feet from any obstruction such as buildings, trees, rock wall, clotheslines, fences and overhead branches. Any swinging equipment is also recommended to be a minimum distance twice the height of the swing beam away from these obstructions or structures as well.

2) Do not locate Jungle Gym on asphalt, concrete, packed earth or other hard surfaces.

Now that you have located a safe area to build your Jungle Gym you are ready to begin.

EASTERN JUNGLE GYM

Site Location

Our exclusive leveling system was developed through more then 26 years of installation experience. This unique leveling system ensures safe installation on un-level properties*.

While your jungle gym will be level and safe some of the activities will be affected by the sloping property (notice the Rock Wall vs. Ladder in Diagrams A1 and A2). For example if your slide is facing downhill (or uphill) it will be at a steeper (or more shallow angle) than normal; therefore it will be faster (or slower) (Diagrams B1 and B2). If your swing beam is installed downhill (or uphill), the swing position closest to the end will be lower to (or further from the ground) (Diagrams B1 and B2).

To determine play area size, it is recommended that you add six feet to the jungle gym dimensions on all sides. However, besides swing beam side supports and other low traffic areas it is not critical to have a six foot “play area”. Installing a resilient surfacing under the jungle gym is always recommended, and can be done AFTER your jungle gym is installed.

Level Yard

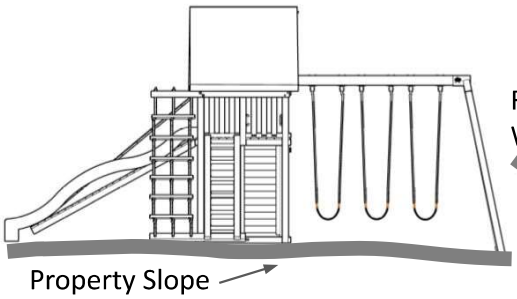

A1

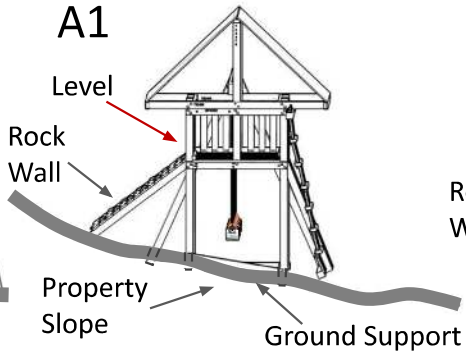

A2

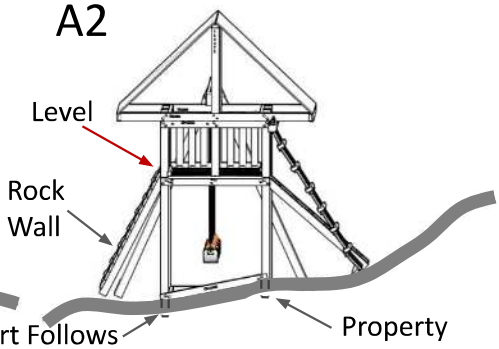

B1

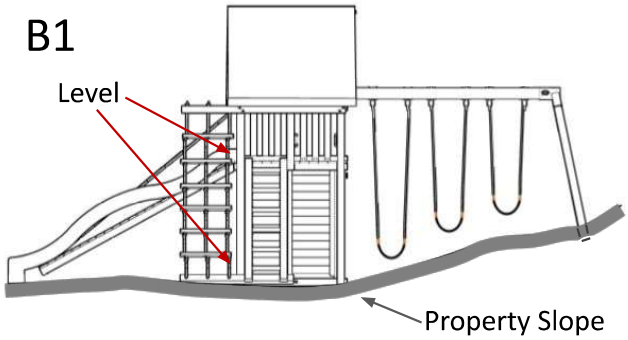

B2

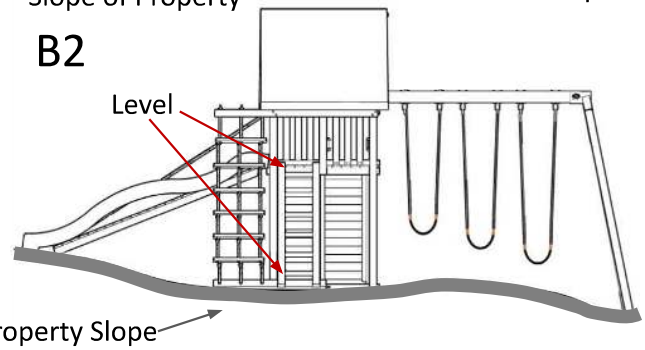

*Eastern Jungle Gym models with an A-frame design do require a level area for installation.

EASTERN JUNGLE GYM

Tools Required

#2 Square Head Screwdriver and bit
Medium Phillips Head Screwdriver and bit
7/16" Standard Socket
1/2" Standard Socket
9/16 Standard Deep Well Socket
Standard Socket Wrench / Electric Impact Gun
Electric Drill
9/16" Box Wrench
1/4" Pilot Drill Bit
7/8" Countersink Drill Bit
Tape Measure
Carpenters Level
Claw Hammer
Razor Knife
Step Ladder
Safety Glasses

Assembly Safety Guidelines

1) Keep all children away from assembly area. Power tools and other dangerous equipment will be needed. Many parts are heavy and could seriously injure a child.

2) Your ready to start your assembly process. You will need at least two adults to safely and easily assemble your Eastern Jungle Gym.

3) Wear safety glasses when drilling out wood to protect your eyes from flying wood clips.

4) Make sure all lag bolts and nuts are tightened and secured completely.

5) After throughly reading all your information, and have located your swing set site. Carefully unpack all your parts. NOTE: keep check list close by. Remember that a little time familiarizing your self with the parts and instructions before you begin will help you avoid mistakes and save time later.

Maintenance Instructions

Here are some maintenance tips that must be done to ensure safe play.

1) At the beginning of each play season look over swing set: check nut, bolts, screws and tighten as needed. Look over all components such as swing seats, slides, chains, ladders and wood components for deterioration or sharp edges and replace if necessary.

2) Oil all metal components such as swing hangers and tire swing hangers.

3) Spot sand any areas that are checking or splintering and check for broken parts and replace if necessary.

4) We recommend on a yearly basis coat your swing set with a sealant. You should look over set to make sure it does not need spot sand first. This will help preserve the natural beauty and characteristics of the wood. Be sure to use non toxic sealants.

EASTERN JUNGLE GYM

Accessories Identification

(6) Heavy Duty Swing Hangers

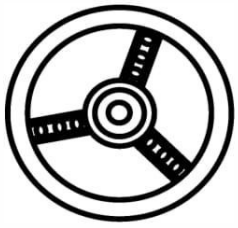

(1) Steering Wheel

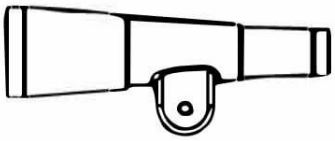

(1) Green Telescope

2 pair Safety Grab Handles

Bag of 8 Rocks with Hardware

(3) 16' Sections Rope

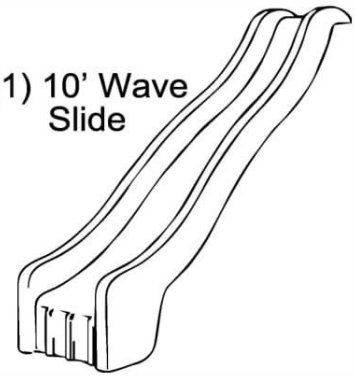

(1) 10' Wave Slide

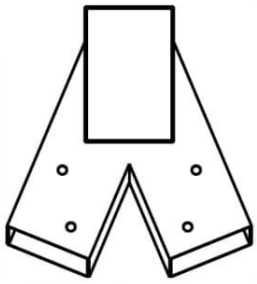

(1) Easy 1-2-3 bracket

(1) Ring Trap Combo

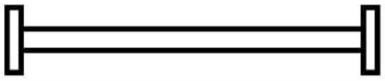

Ladder Rungs

(2) Green Sling Swings

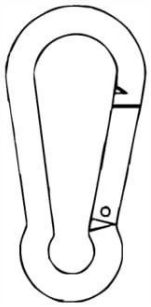

(6) Snap Hooks

Items not shown:

1- Tent top

EASTERN JUNGLE GYM

Hardware Identification

H6- 3/8” x 6 ½” Hex Bolt
B5- 5/16” x 5” Lag Bolt
B3- 5/16” x 3” Lag Bolt
S2- 2” Bugle Head Screw
S1- 1 ½” Bugle Head Screw
N1- Nut
W 3/8” Washer
W 5/16” Washer

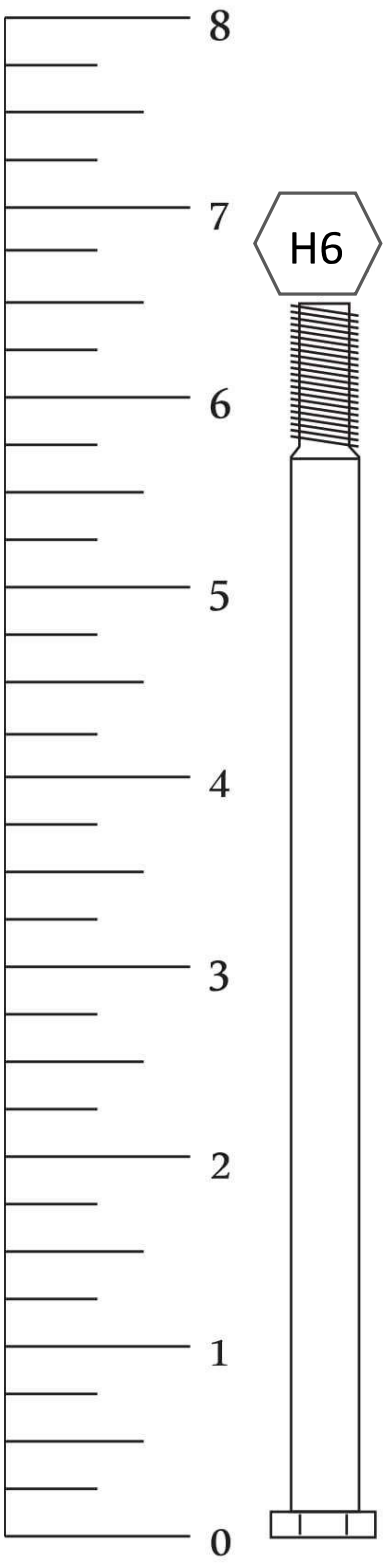

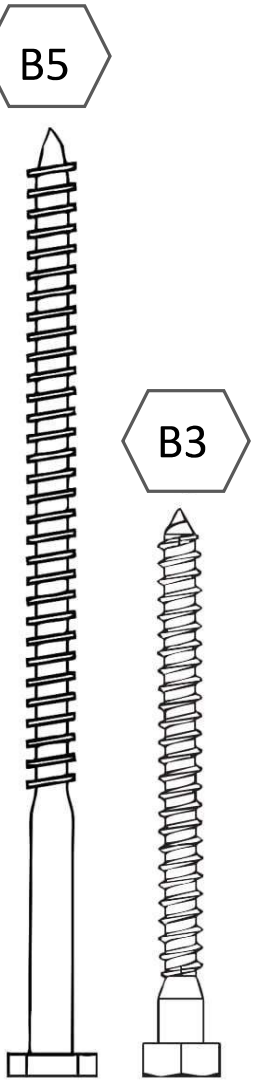

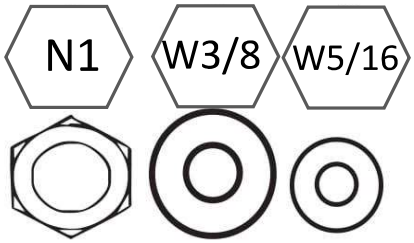

Hardware for rock holds, telescope, steering wheel Captains Wheel and Binoculars come in the packaging.

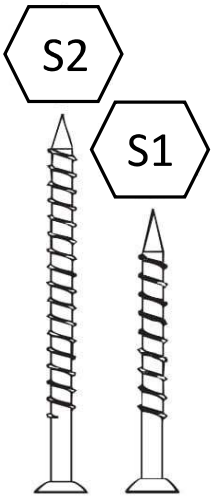

EASTERN JUNGLE GYM

SPECIAL NOTE BEFORE BEGINNING YOUR ASSEMBLY:

All Recessed holes must be piloted with 1/4” drill bit to help minimize splintering.

All lag bolts must be accompanied with a washer before driving in lag bolt.

Now you are ready to begin assembling!

Wood Idenification Dreamscape

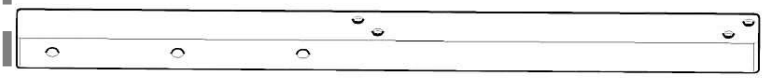

1 @ JACOBS TOP PART # JT4465

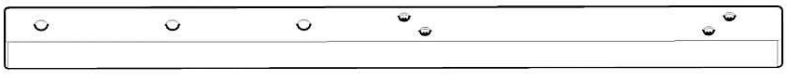

1 @ JACOBS BOTTOM PART # JB4465

2 @ GROUND SUPPORT OUTSIDE PART # GSO2455

2 @ FLOOR JOIST PART # FJ2455

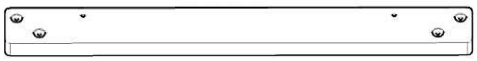

2 @ FLOOR JOIST PART # FJ2436

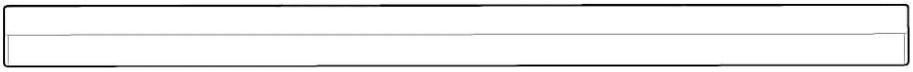

2 @ TENT TOP SUPPORT PART # TS4476

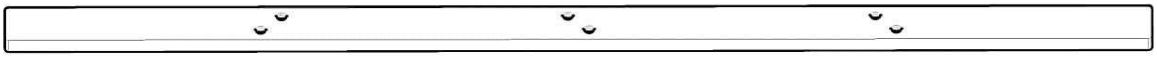

2 @ TENT RAIL PART # TR2496

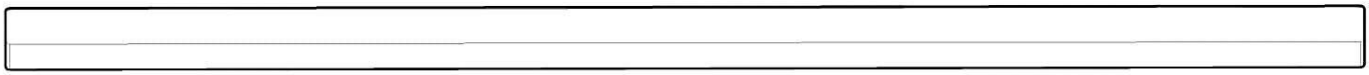

2 @ SIDE SUPPORT PART # SSP44114

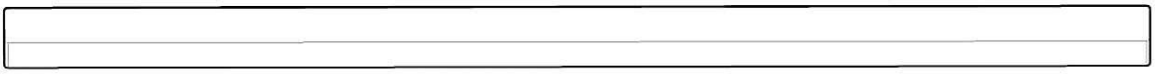

4 @ POSTS PART # P4496

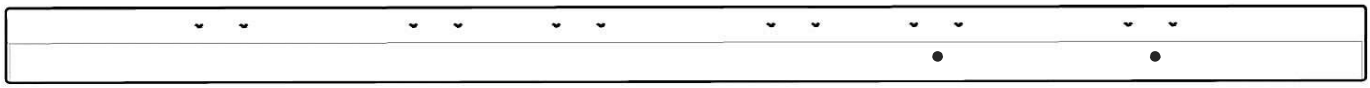

1 @ SWING BEAM PART # SBHG46120

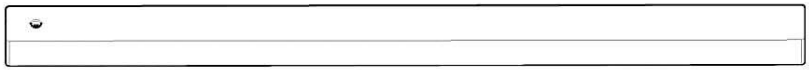

2 @ LADDER PART # LS4467

1 @ ROCKWALL JOIST PART # RWJ2470R

1 @ ROCKWALL JOIST PART # RWJ2470L

4 @ FLOOR TEAK
PART # PT246

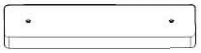

1 @ SLIDE BLOCK
PART # SB2416

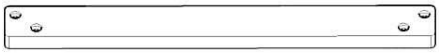

4 @ FLOOR AND GROUND SUPPORT
PART # R2436

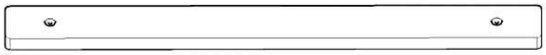

2 @ TENT SUPPORT PART # TS2445

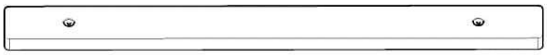

1 @ TENT SUPPORT PART # TTS2445

6 @ JACOBS LADDER RUNG
PART # JL2426

Kit Idenification Dreamscape

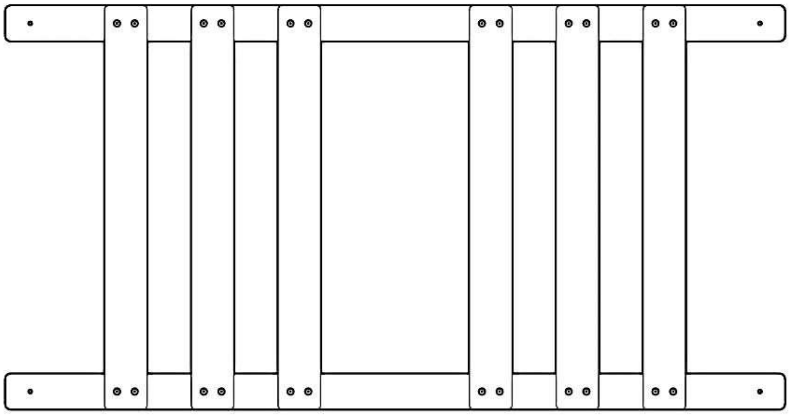

1 @ WALL KIT PART# WRK2255

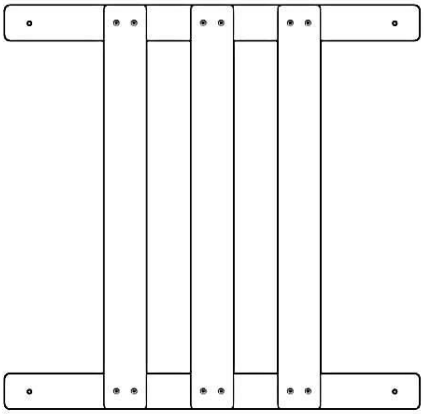

1 @ HALF WALL KIT PART# HWK2229

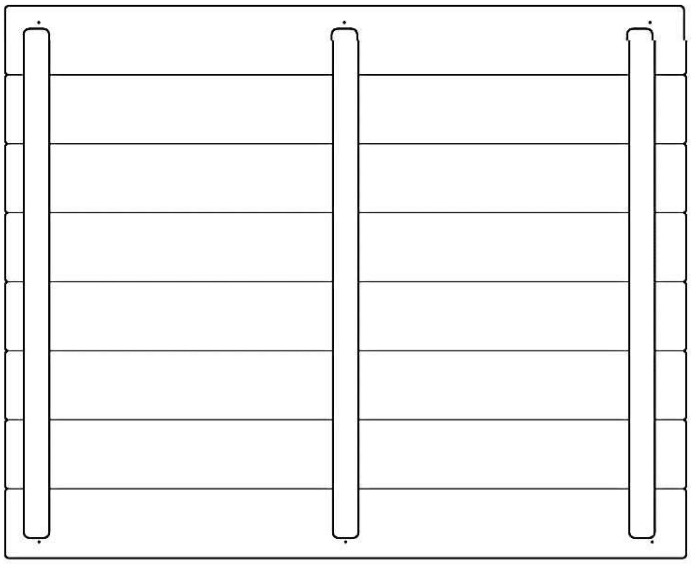

1@ FLOOR KIT PART # FLK848

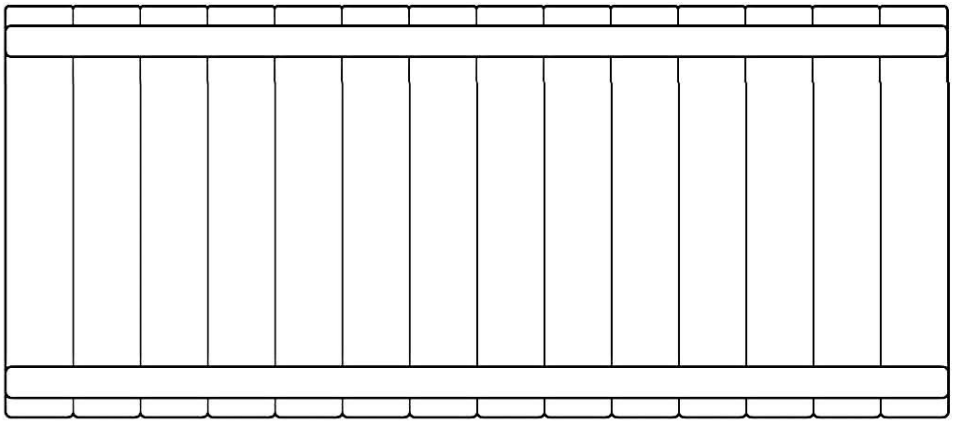

1 @ ROCKWALL KIT PART # RWK1429

Step #1-Ground Support Base Dreamscape

- Begin by laying out (2)- GSO2455 and (2)-R2436 as shown in drawing. Measure 3 ½” from end of GSO2455. Using a B3 lag bolt, bolt the pieces together.

NOTE: The counter sink holes in R2436 should face the inside of box. The counter sink holes on GS2455 should face outside of box.

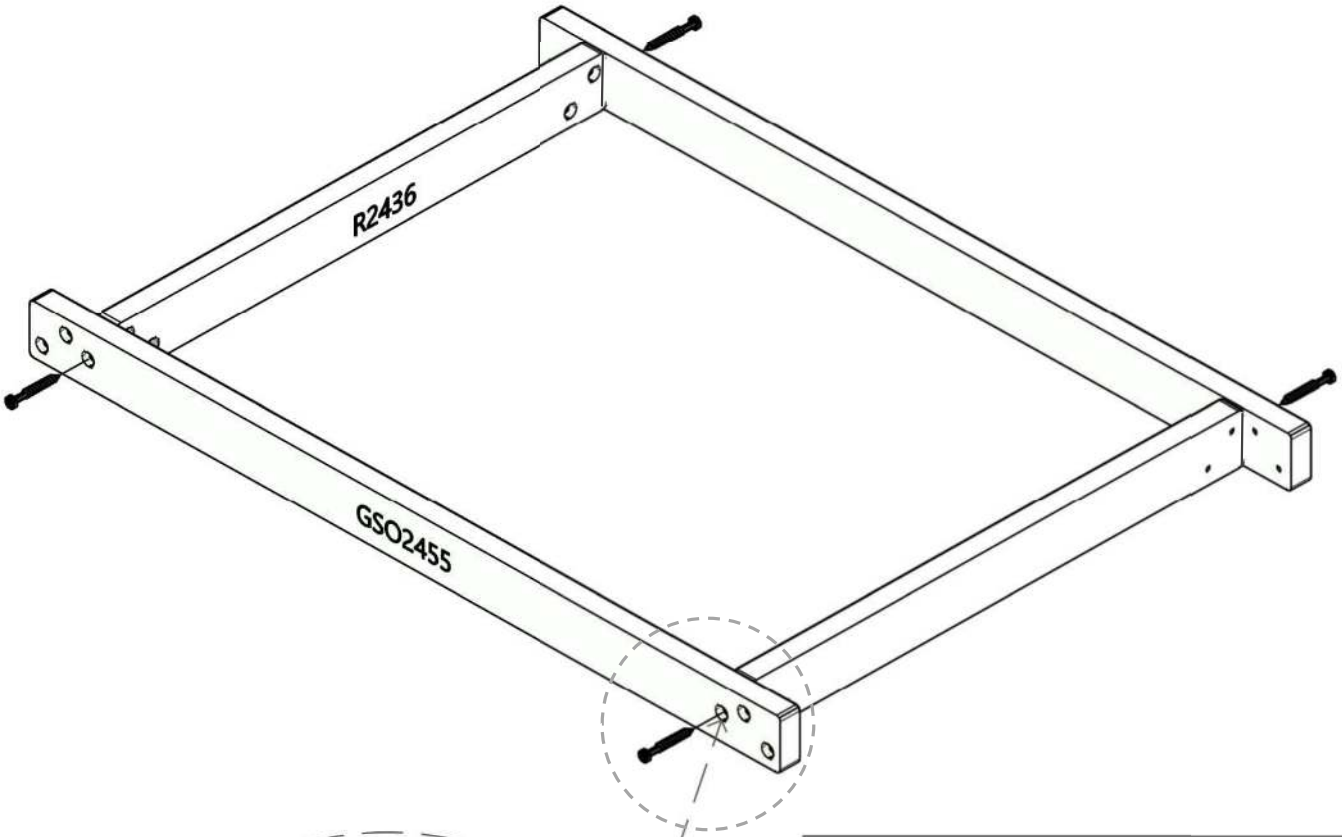

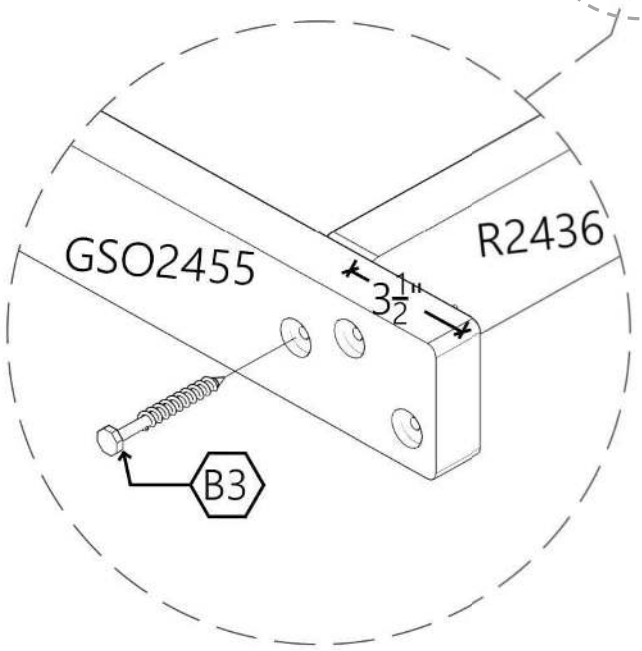

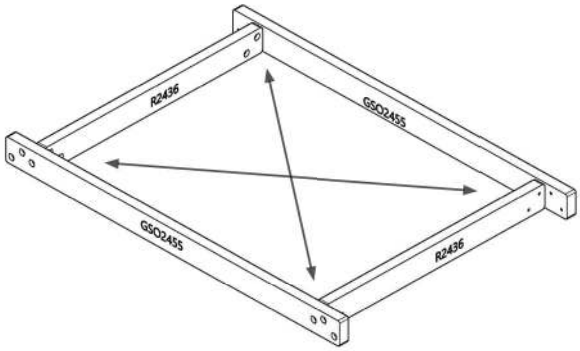

Measure from corner to corner on each side of ground support base. Make sure your measurements are the same. This will square of base.

Step #2- POST ASSEMBLY Dreamscape

- Layout (4)-P4496 club house posts (as shown in the drawing).
- Measure in 36-1/2" from one side of P4496 posts and draw a line (as shown in the drawing). Do this to all 4 posts.

Reminder: Recessed holes must be piloted with ¼" drill bit

NOTE: Mark the longer side with an X.

- Now place PT246 floor teak support over "X" with Post complete continue to next page for post edge on line drawn. Install with (2)-B3 lag bolts. installation on clubhouse. Continue on all 4 posts.

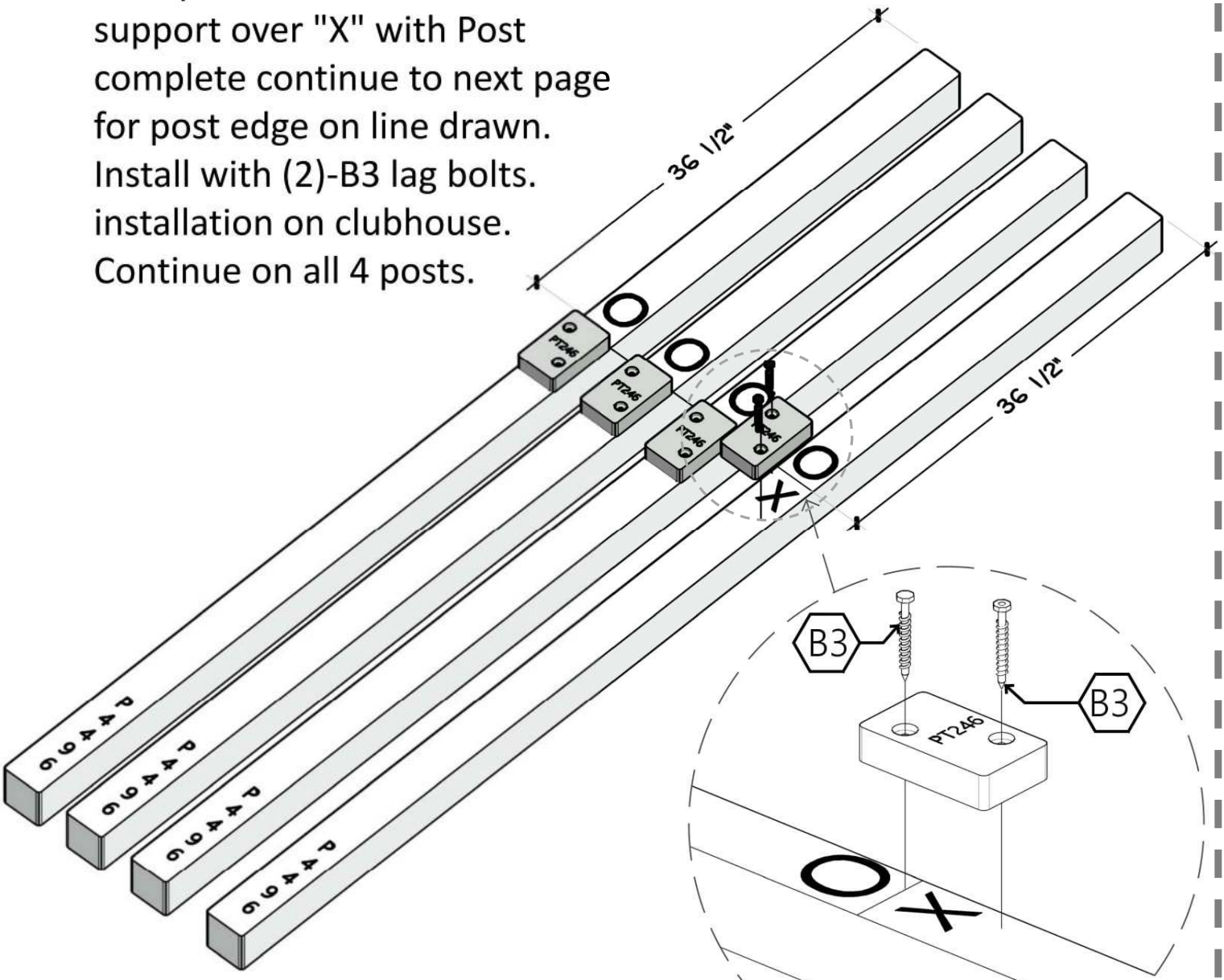

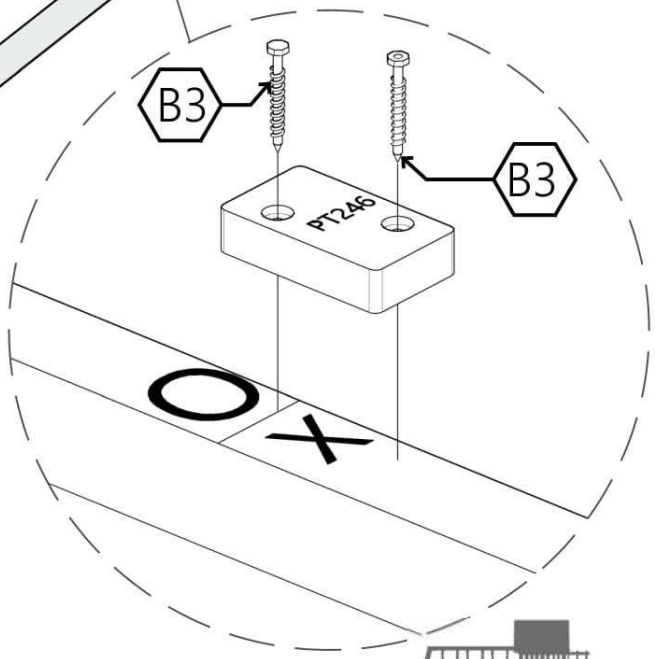

NOTE: The 36-1/2" side is the TOP of post, mark with an "O".

Step #3- POST Installation Dreamscape

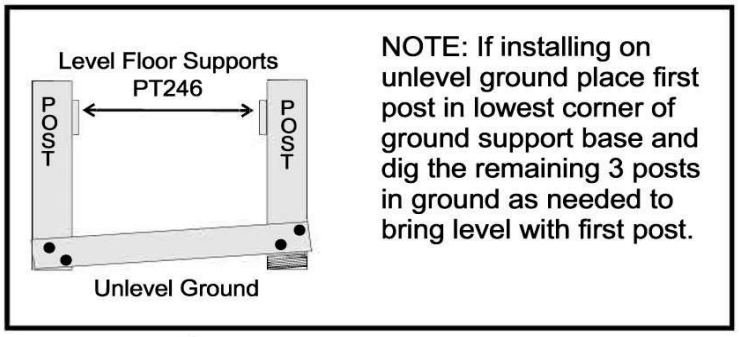

- Position first completed 4x4 post into the lowest corner of the ground support base (as per you landscape). Then level both sides.

NOTE: Notice the position of post is on the outside of the base. Also the 2x4 teak is facing inside of base.

- After leveling, fasten 4x4 post to ground support base using (2) B3 lag bolts (as shown in callout).
- Using first post as a guide place level on PT246 floor teak mounted on post. Dig down second post until level with first post. Again fasten with B3 lag bolts in holes provided. Continue this process until all 4 post are fastened.

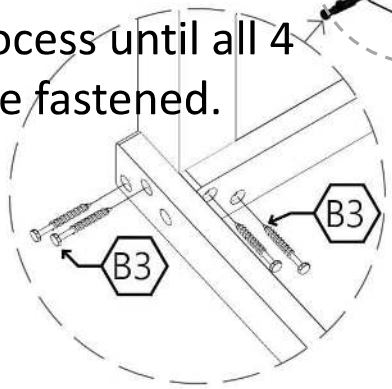

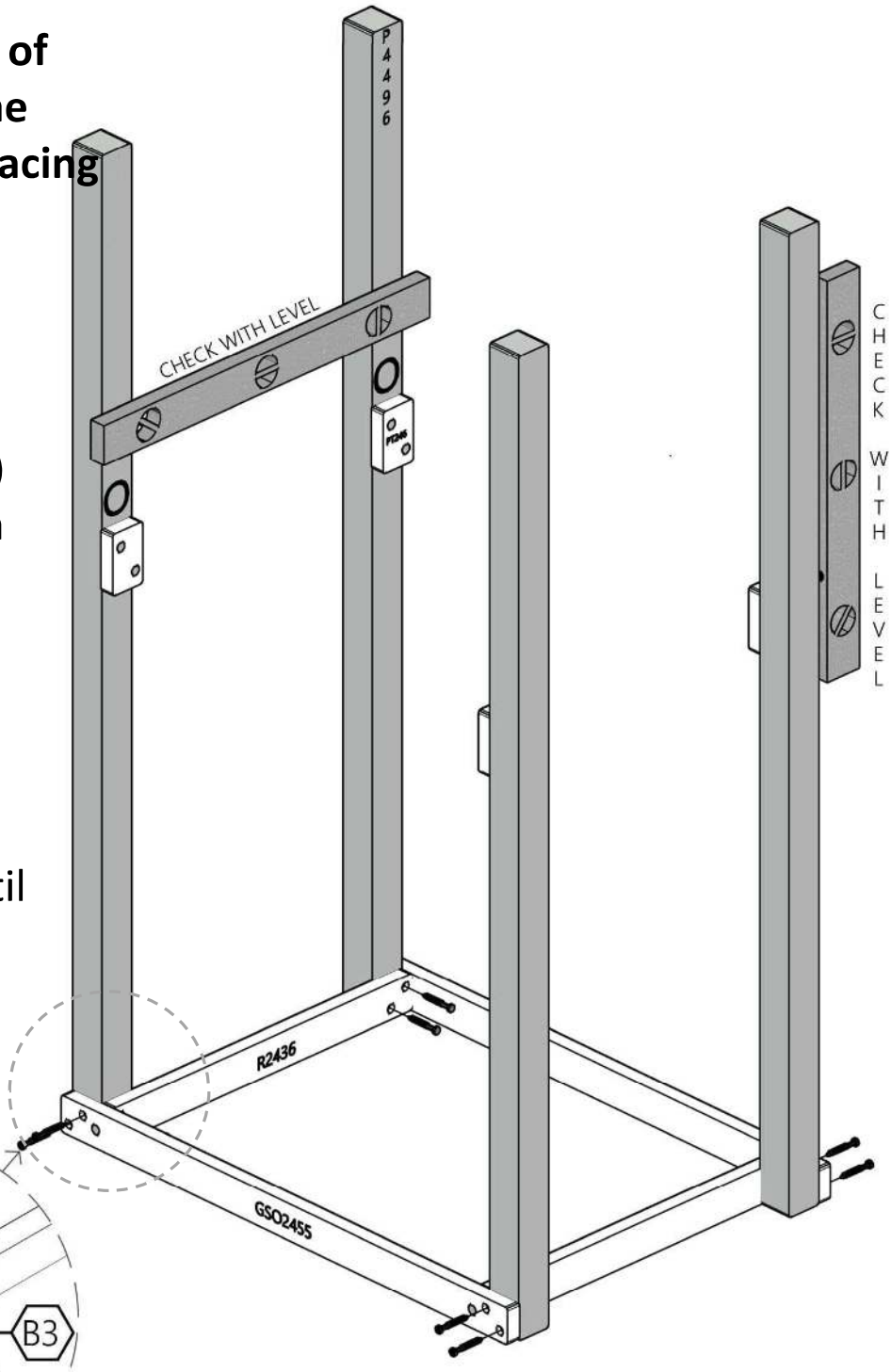

NOTE: The "O" mark is at the top.

Step #4- Floor Joist Assembly Dreamscape

- Install (2)- FJ2436 boards on top of PT246 using (8)-B3 lag bolts (as shown in callout).

NOTE: Center countersink hole on FJ2455 should be at the top of joist see drawing.

- Next install (2)- FJ2455 boards on outer posts using (12)-B3 lag bolts.

Note: FJ2455 will sit flush with FJ2436.

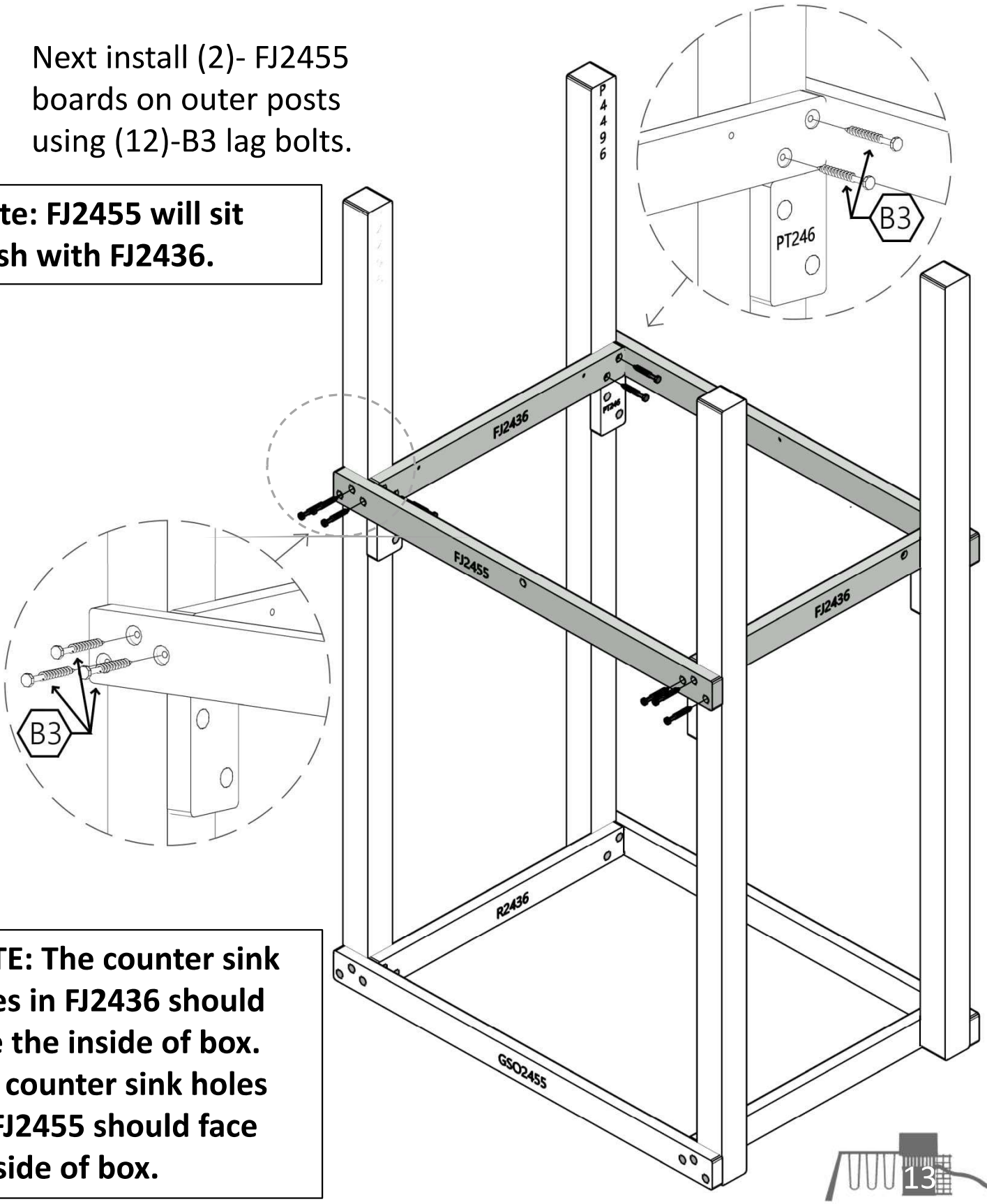

NOTE: The counter sink holes in FJ2436 should face the inside of box. The counter sink holes on FJ2455 should face outside of box.

Step #5- Floor kit Install Dreamscape

NOTE: The counter sink holes in FJ2436 should face the inside of box. The counter sink holes on FJ2455 should face outside of box.

- Place FLK848 on top of floor joists. At this point all four post and floor should be level.
- Align center teak with center hole on FJ2455. Bolt floor teaks under clubhouse using (3)-B3 lag bolts. Repeat on the other side.

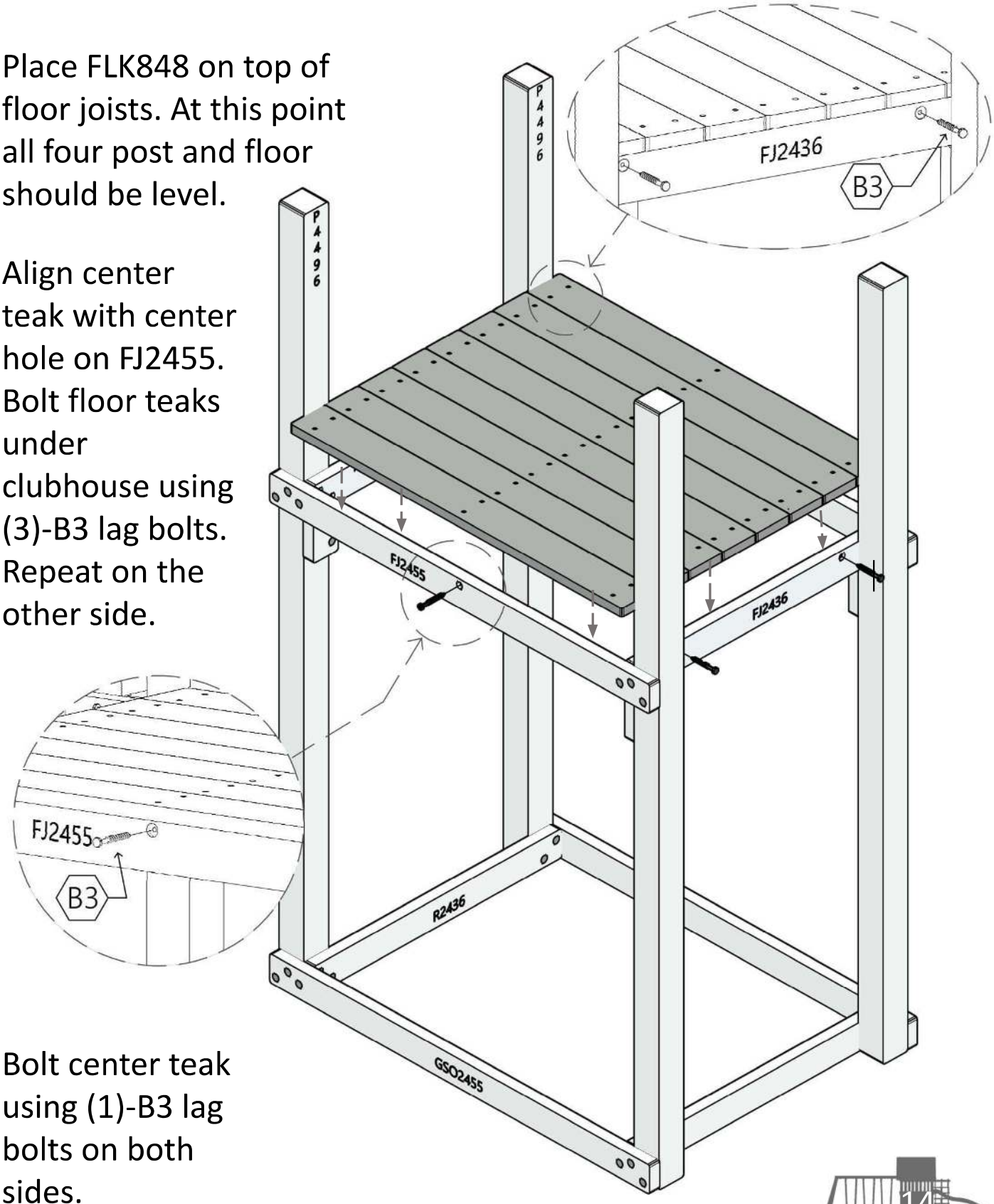

- Bolt center teak using (1)-B3 lag bolts on both sides.

Step #6- Full and Half Wall Install Dreamscape

NOTE: The counter sink holes on WRK2455 and HWK2229 should face away from the post.

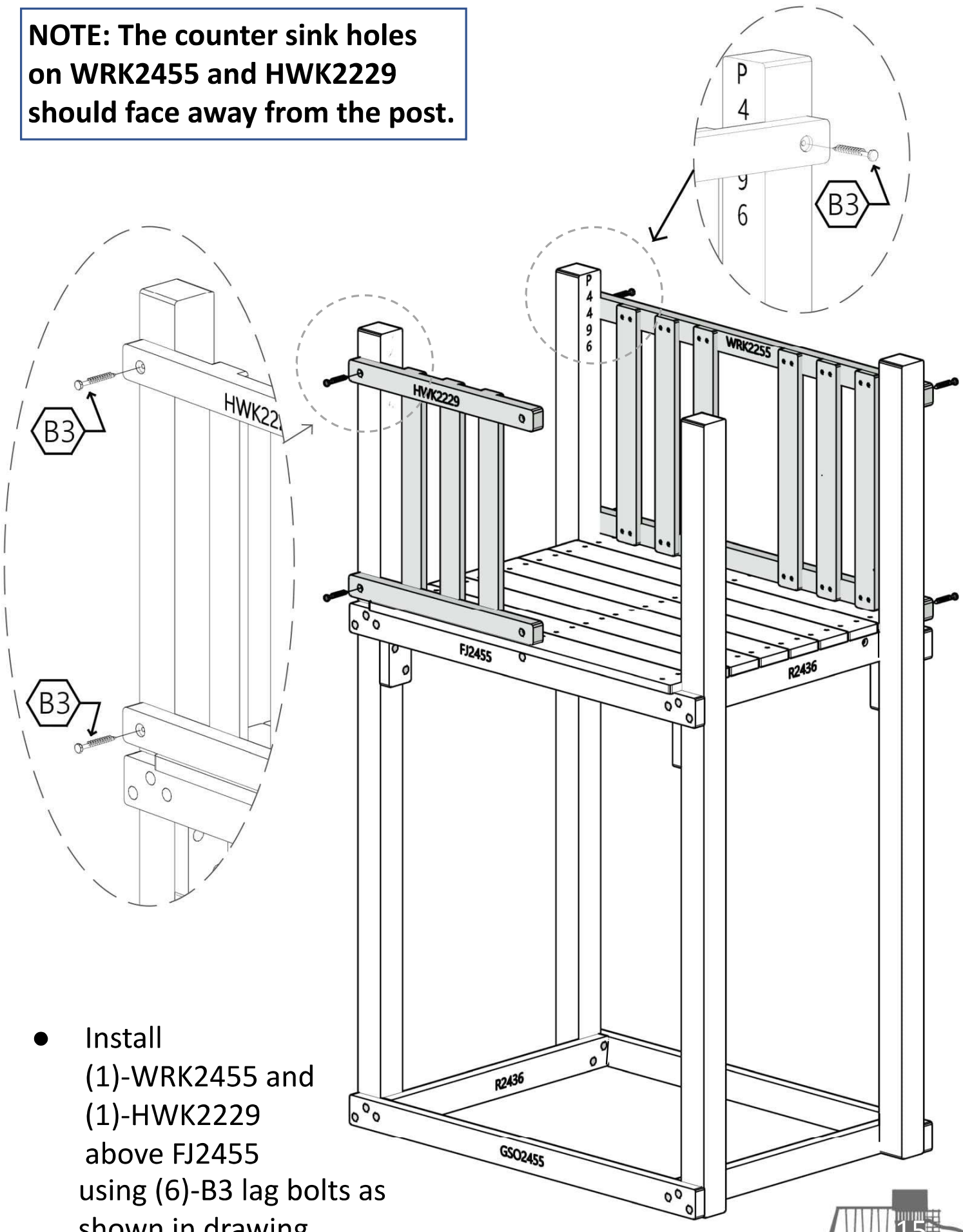

- Install (1)-WRK2455 and (1)-HWK2229 above FJ2455 using (6)-B3 lag bolts as shown in drawing

Step #7- Tent Rail Install Dreamscape

NOTE: Rail should extend 20 1/2" from each side.

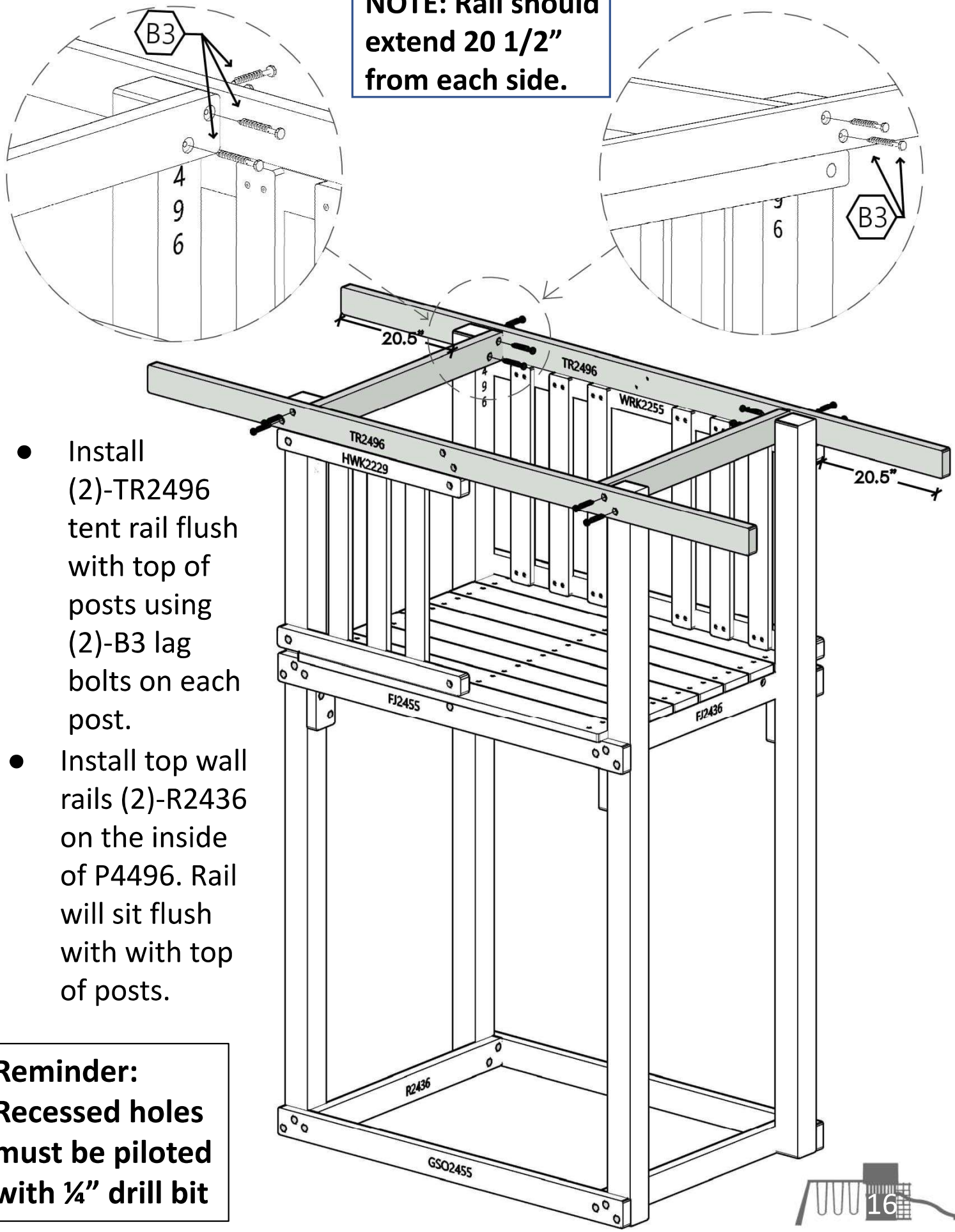

- Install (2)-TR2496 tent rail flush with top of posts using (2)-B3 lag bolts on each post.
- Install top wall rails (2)-R2436 on the inside of P4496. Rail will sit flush with with top of posts.

Reminder: Recessed holes must be piloted with ¼" drill bit

Step #8- Tent Post and Rail Install Dreamscape

- Install tent support TS4476 to the center of TR2496 using (2)-B3 lag bolts. Use (2)-B3 lag bolts to connect to wall kits.

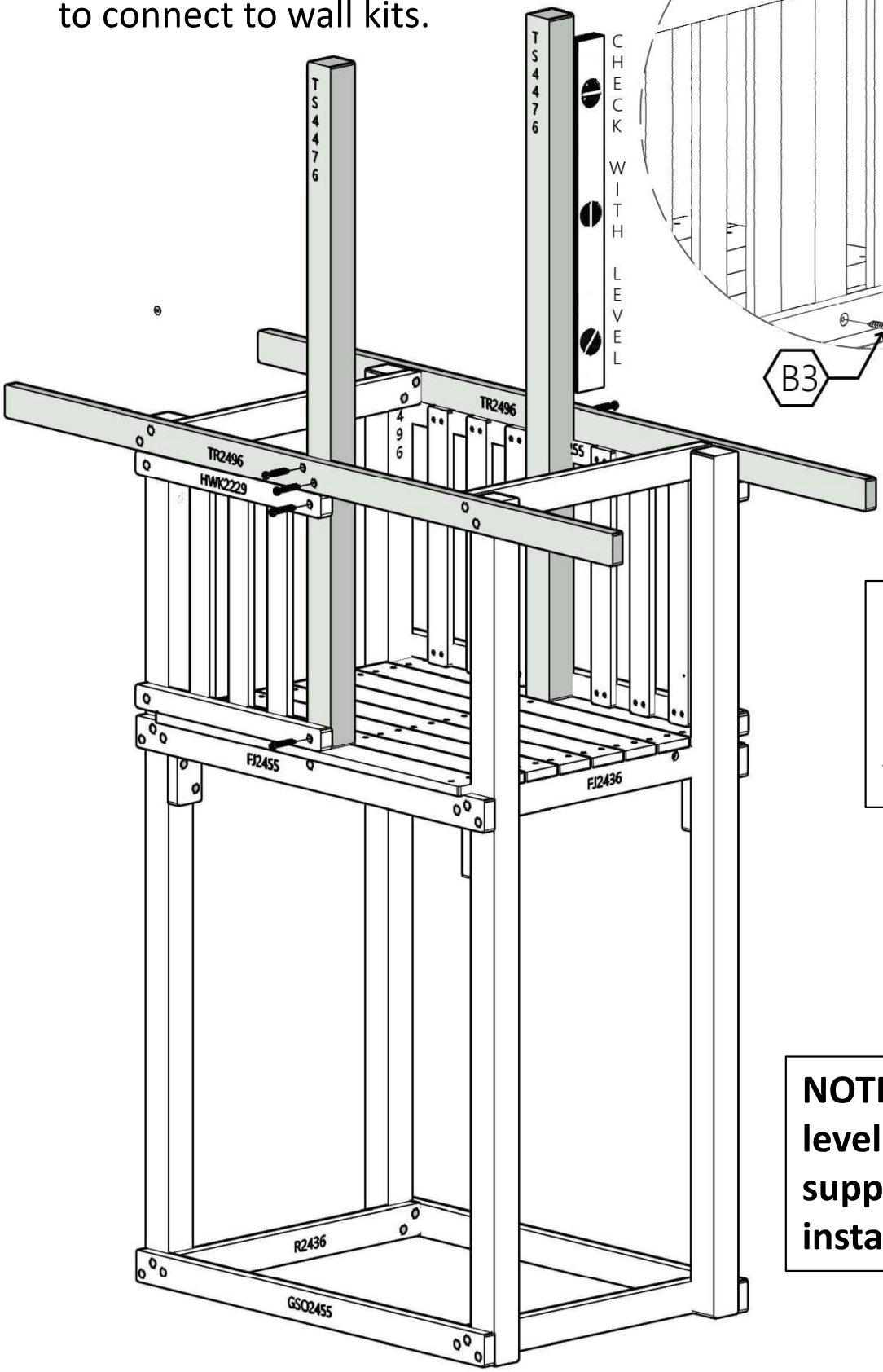

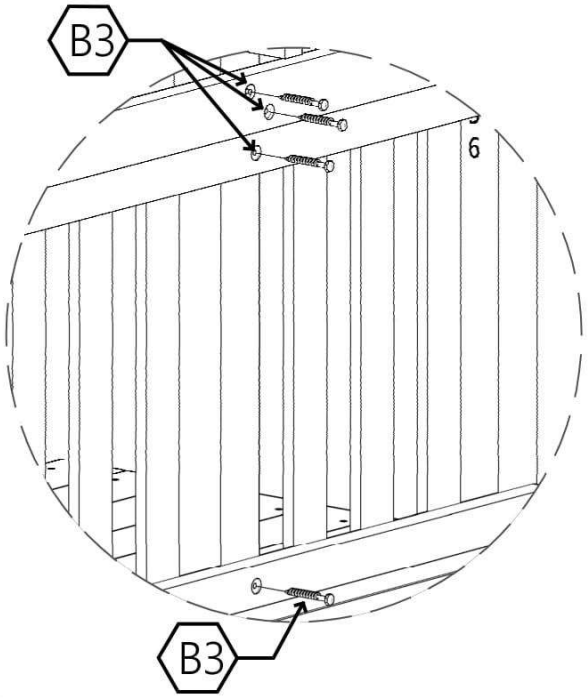

Reminder: Recessed holes must be piloted with ¼" drill bit

NOTE: Make sure you level your tent support posts before installing lags.

Step #9- Ladder Assembly Dreamscape

NOTE: Counter sink holes face each other.

- Layout (2)-LS4467 ladder rails and (6) - ladder rungs (21 7/8") (as shown in the drawing).

- Measure from the top which is the counter sink holes side. Using the measurements above (as shown in the drawing).

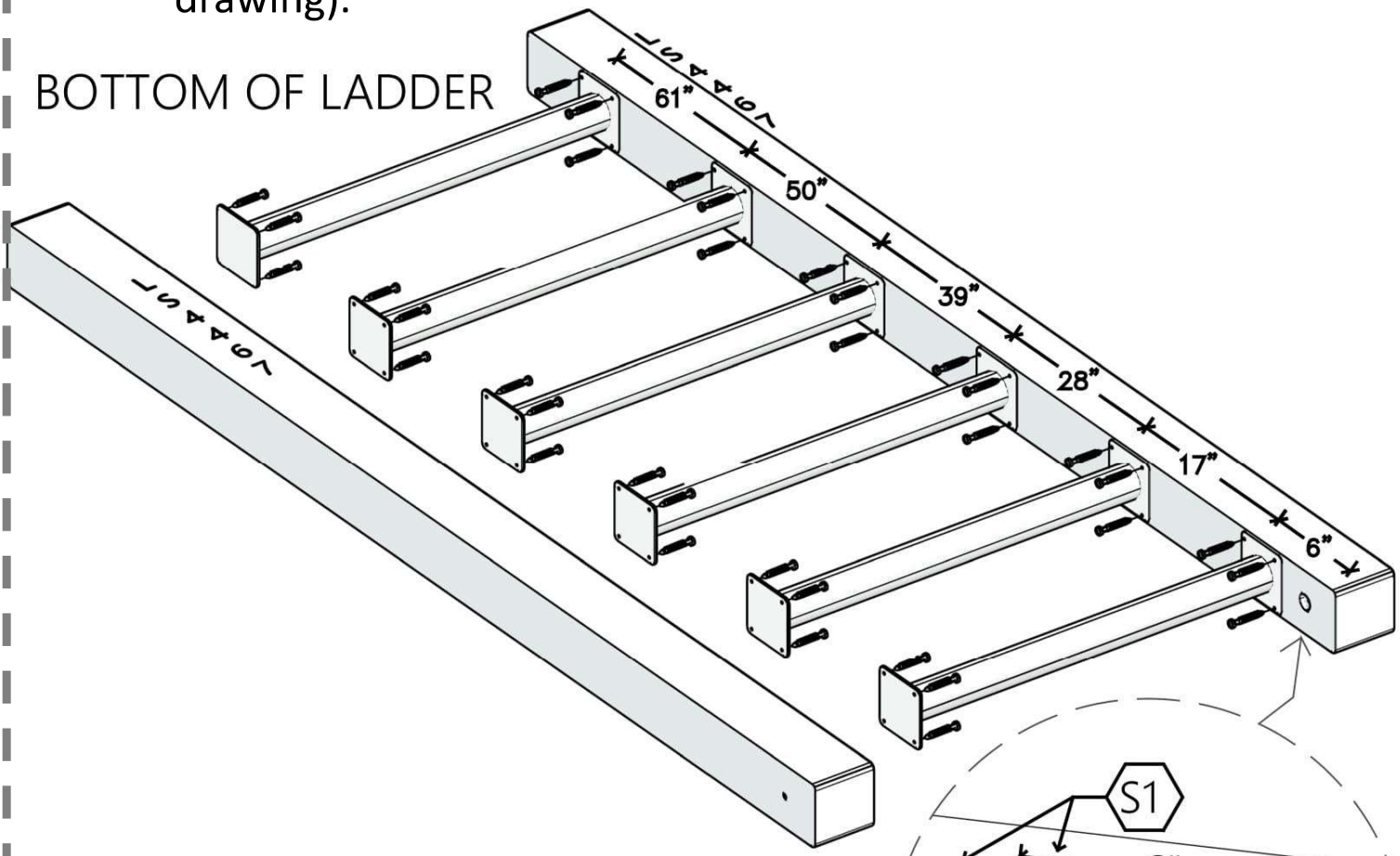

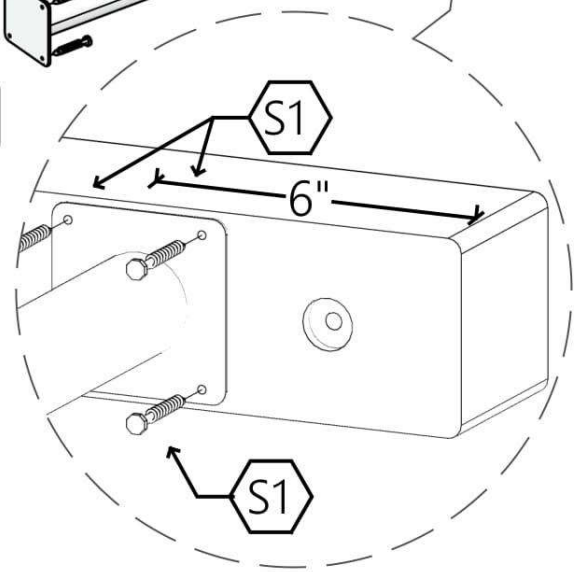

- Screw the ladder rungs into ladder using S1 Screws. Measurements are to center of rungs. Continue until all 6 rungs are screwed in.

Step #10- Jacob bottom Install Dreamscape

- Install JB4465 Jacobs Ladder Bottom rail to the ladder. Make sure to leave 3 1/2" overhang on the right side of ladder and flush with the bottom. Using holes provided install (2)-B5 lag bolts on each side.

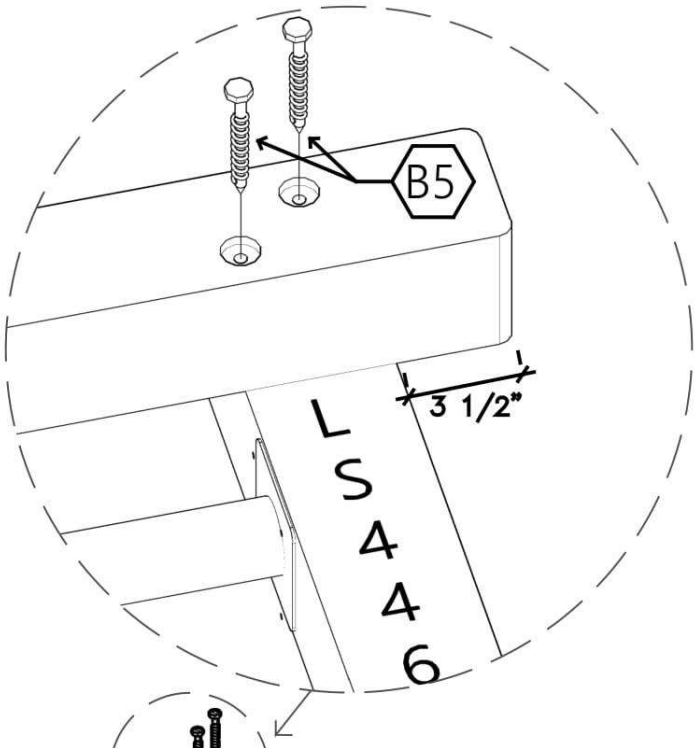

Holes facing up.

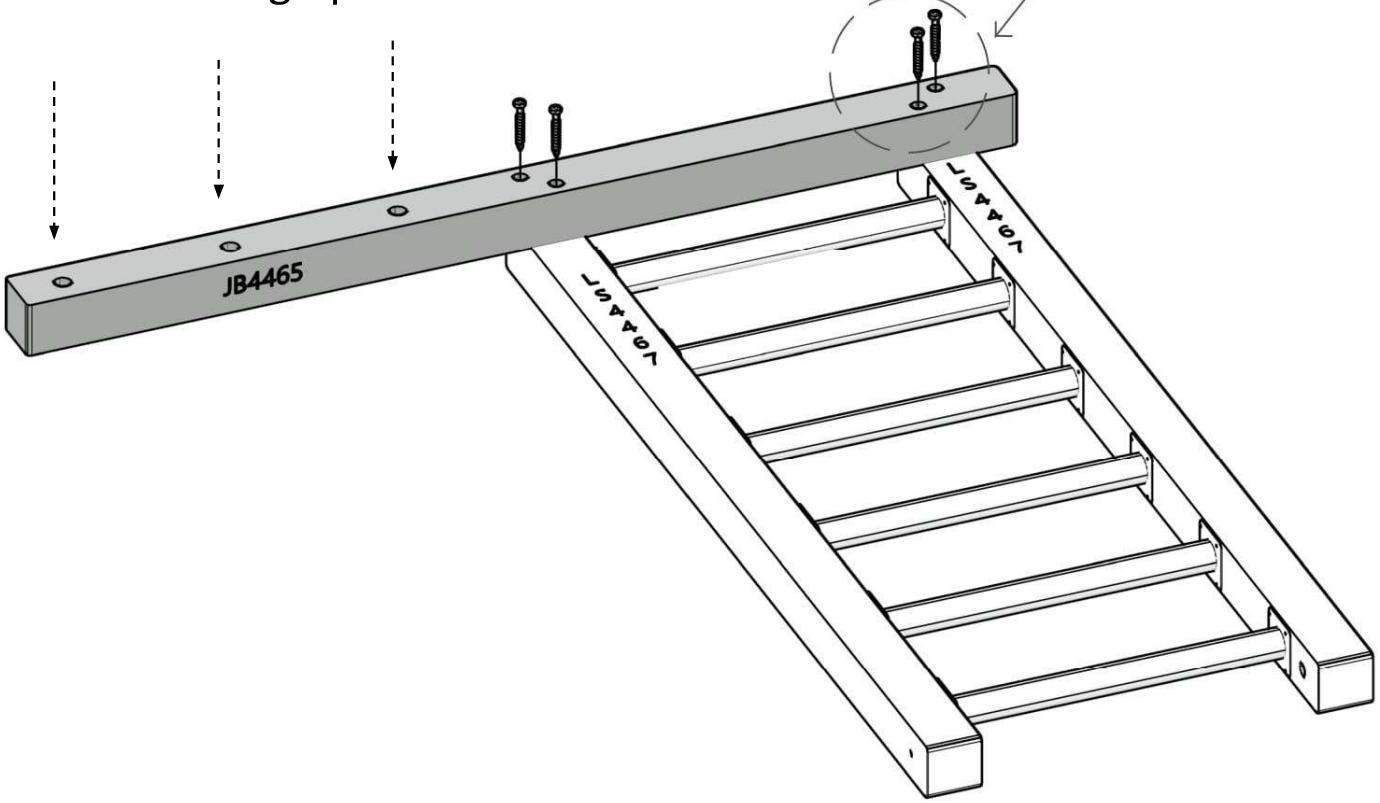

Step #11- Ladder and Jacob Top Install Dreamscape

- Install ladder as shown. Hold top of ladder flush with the top of floor (as shown in drawing). Jacobs Ladder Bottom rail should face out towards the slide wall opening.
- Using (2)-B5 Lag bolts. Bolt the ladder into Post using holes provides (as shown in drawing).

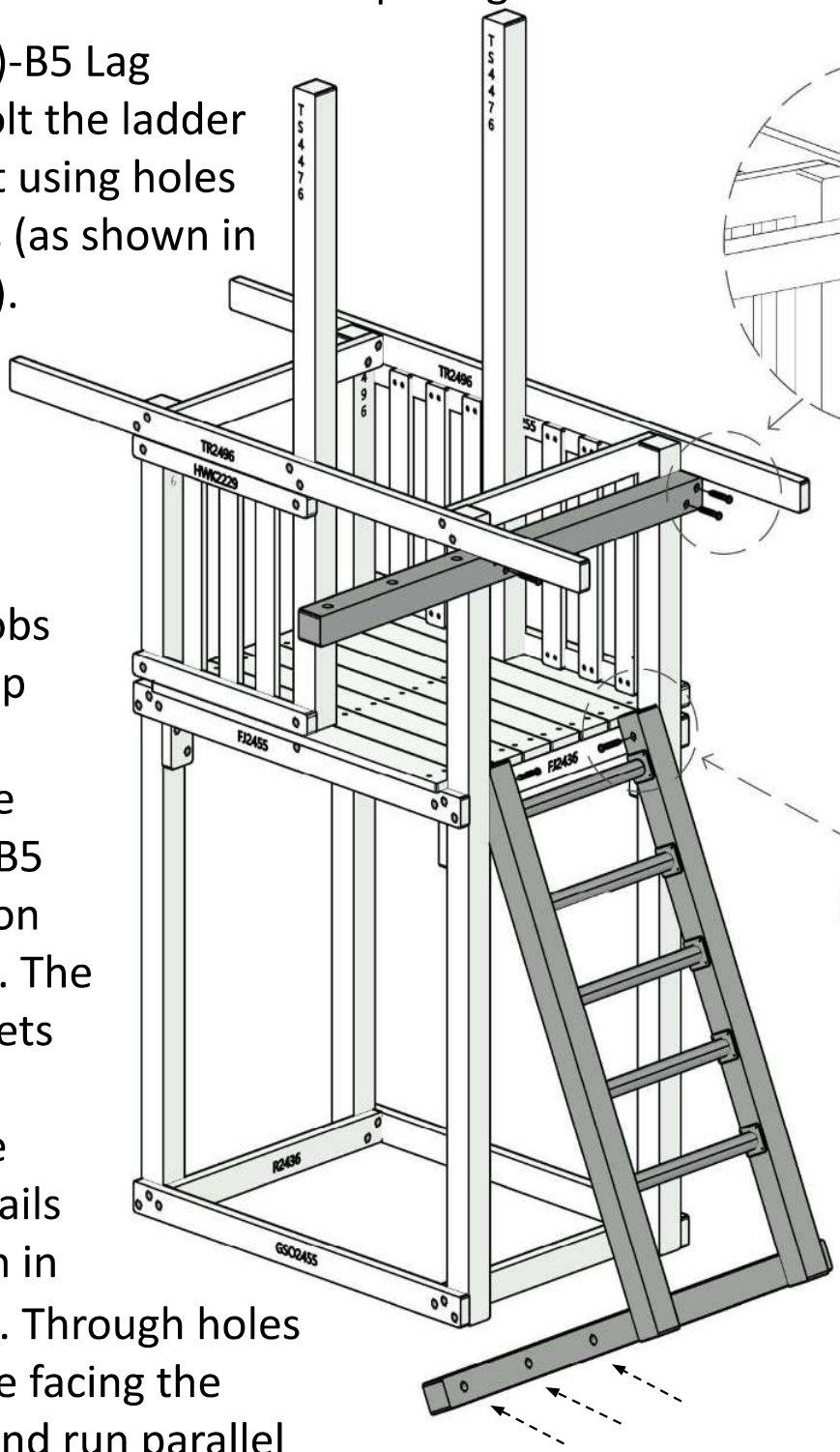

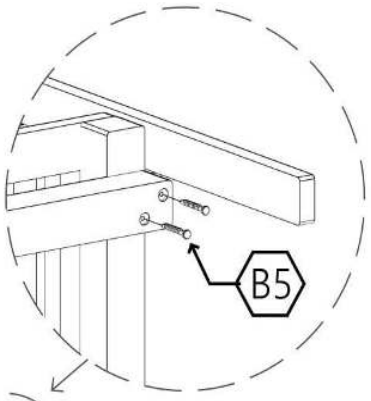

- Mount JT 4465 Jacobs Ladder top rail onto clubhouse using (2) B5 lag bolts on each side. The JT 4465 gets mounted under the wall top rails (as shown in drawing). Through holes should be facing the ground and run parallel with the bottom rail mounted on the ladder.

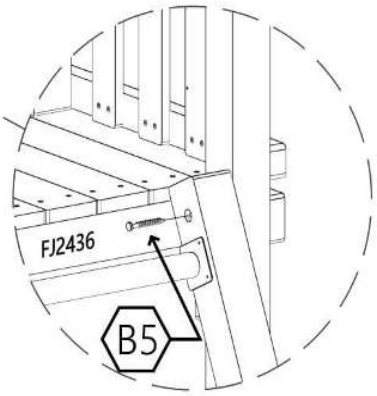

NOTE: Holes for Jacob's Ladder face OUT.

Step #12- Rockwall Joist Install Dreamscape

Reminder: Recessed holes must be piloted with ¼" drill bit

- From under the clubhouse fasten Rockwall joist to post using (1)-B3 lag bolts on each side (as shown in drawing).

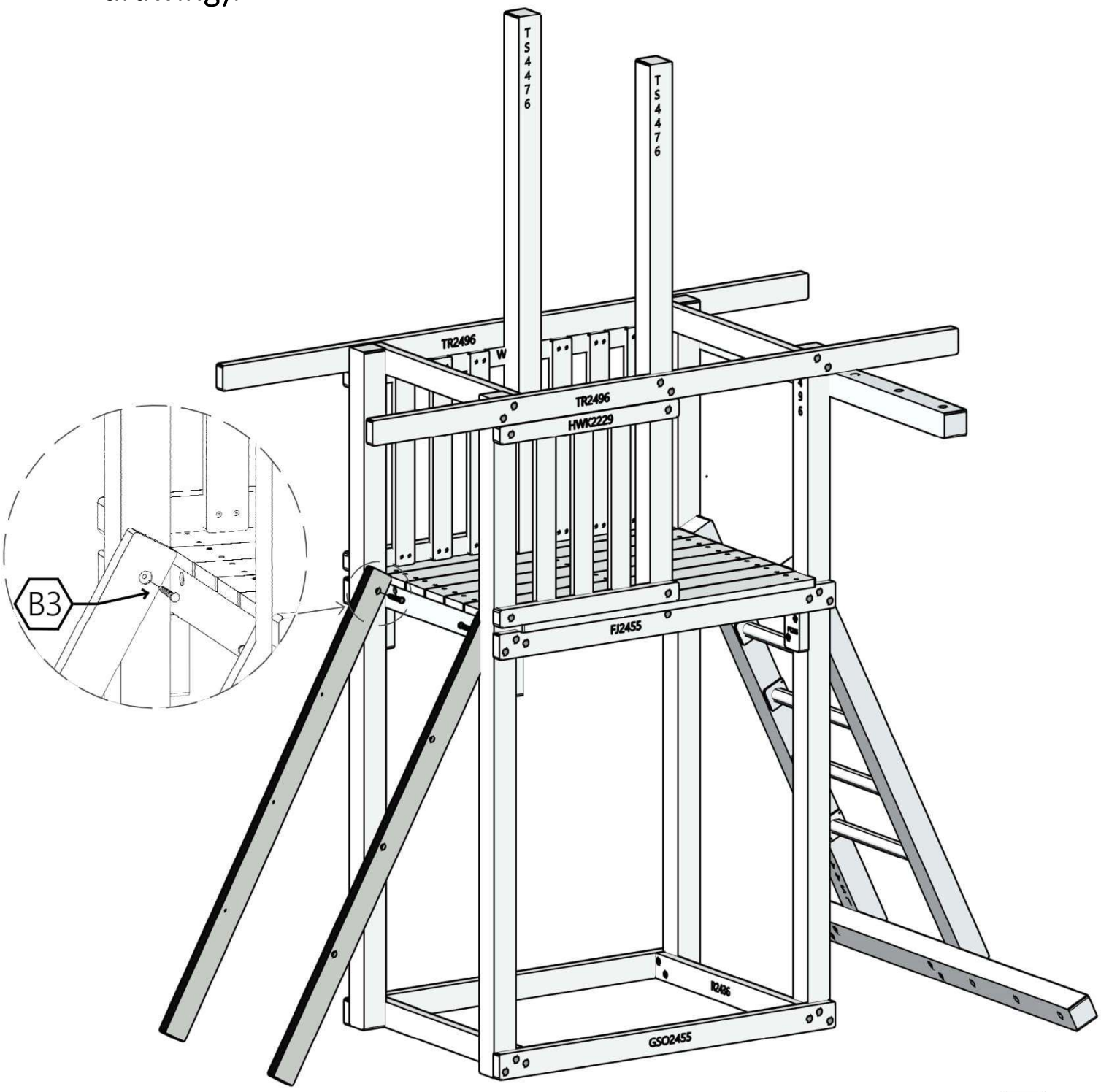

Step #13- Rockwall Kit Install Dreamscape

Note: RWK should be flush with RWJ2470 at the top of the wall.

- Install RWK1429 on top of RWJ2470 using 6-B2 bolts.

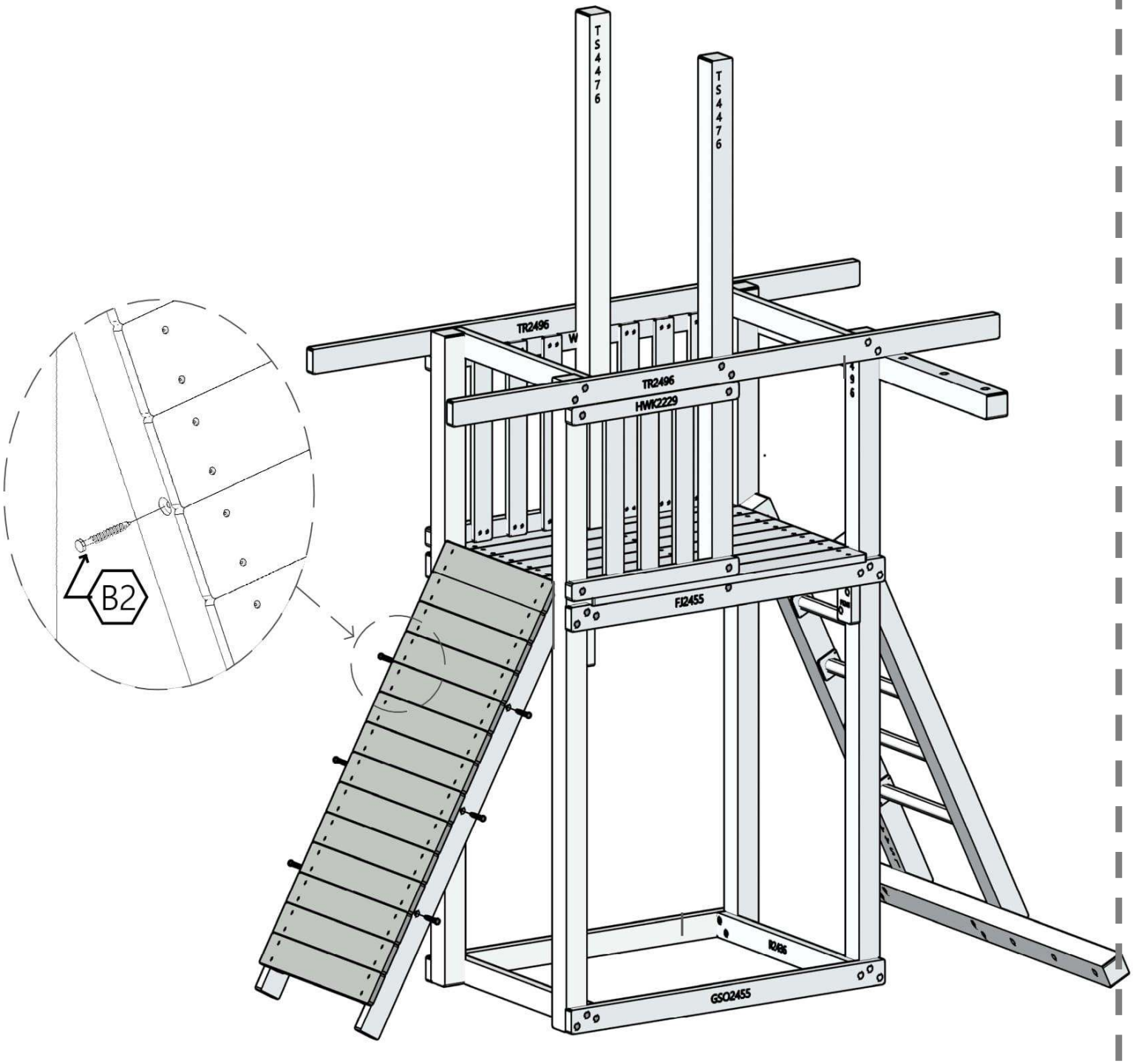

Step #14- Rockwall Handholds Dreamscape

- Place 8 rock hand holds in desired location on decking of rock wall.
- After you have located your desired positions. Mark with a pencil where to drill holes. Remove rocks and drill holes using a 3/8 drill bit.

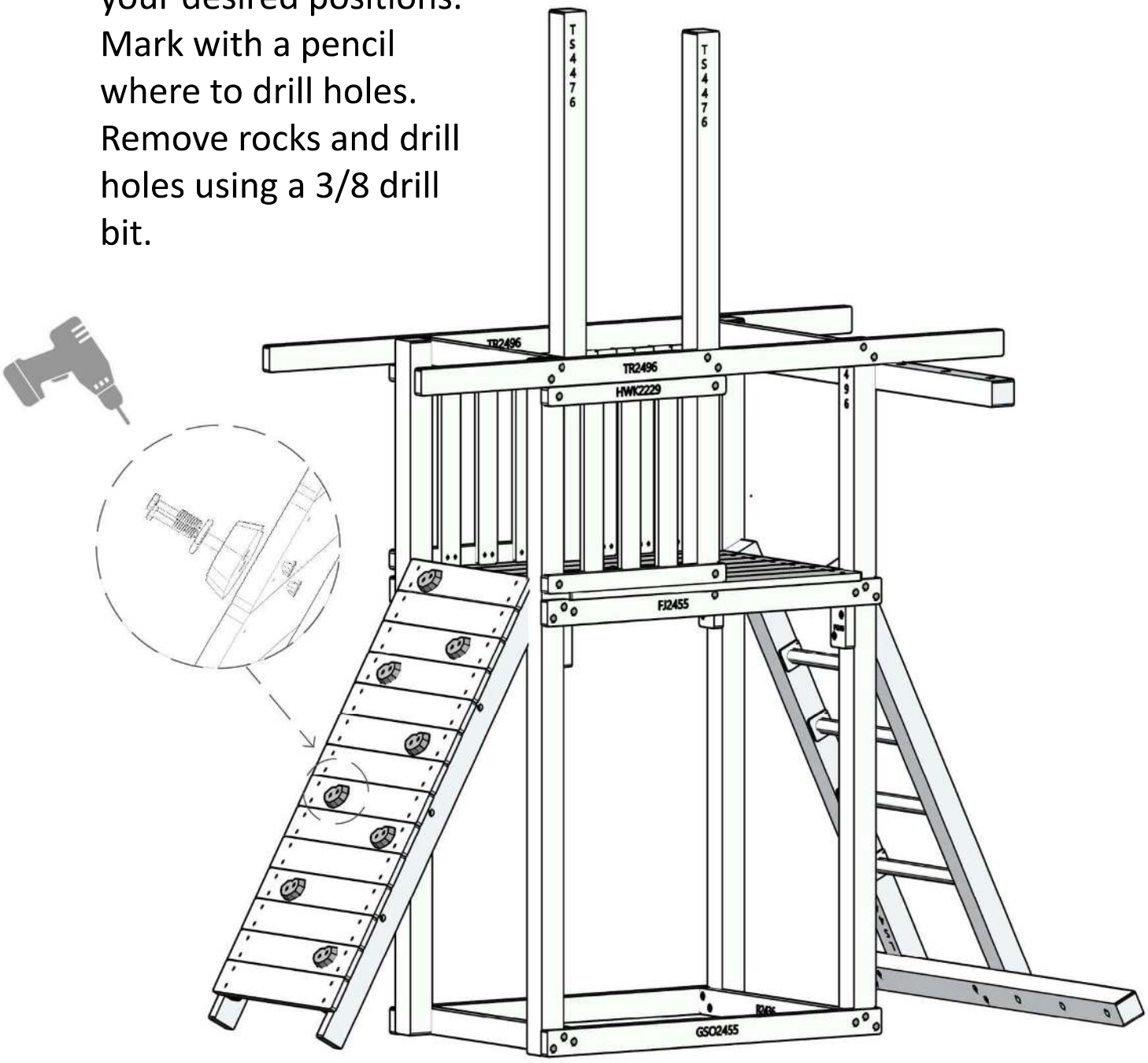

- Place a T-nut into the back of Rockwall and hammer in. Place rock hand hold on decking. Insert washer and lock washer than bolt in place. Tighten using a 7/16" socket. Continue until all twelve rock hand holds are completed.

Step #15- Tent Support Assembly Dreamscape

- Mount (1)-TTS2445 tent support on top of TS4476. Install with (2)-B3 lag bolts. There will be a 4.5” overhang on each side.

Note: Only the two holes will have screws leaving two empty holes on each rail.

- Install (2)-TS2445 tent supports above the ladder and Rockwall. Install with (2)-B3 lag bolts on each side. There will be a 3” overhang (as shown in drawing).

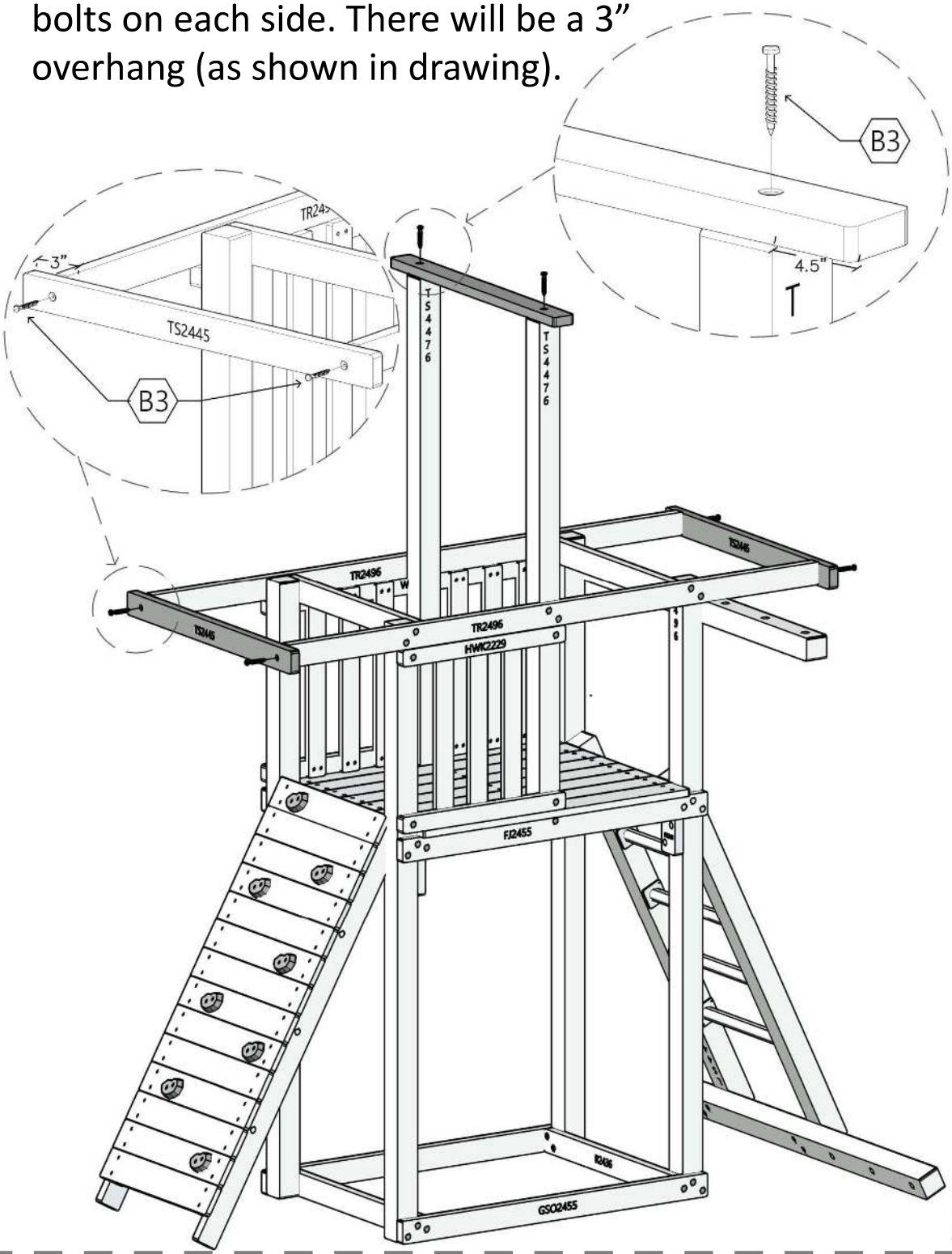

Step #16-Tent Top and Grab Handles Dreamscape

- Drape tent top over TS2445 tent supports than wrap under and screw with (4)- S2 screws supplied (as shown in drawing). Repeat on opposite side.

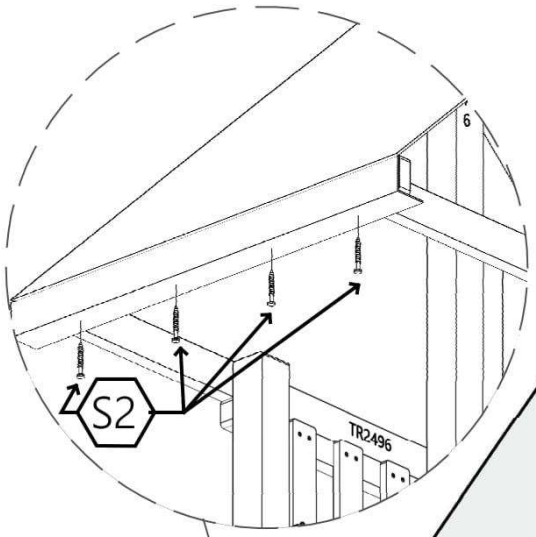

- Install (2) pair of grab handles above the Rockwall. Measure up from the floor decking approximately 6” This is where the bottom hole of the grab handle will be. Use hardware provided. Repeat on opposite side.

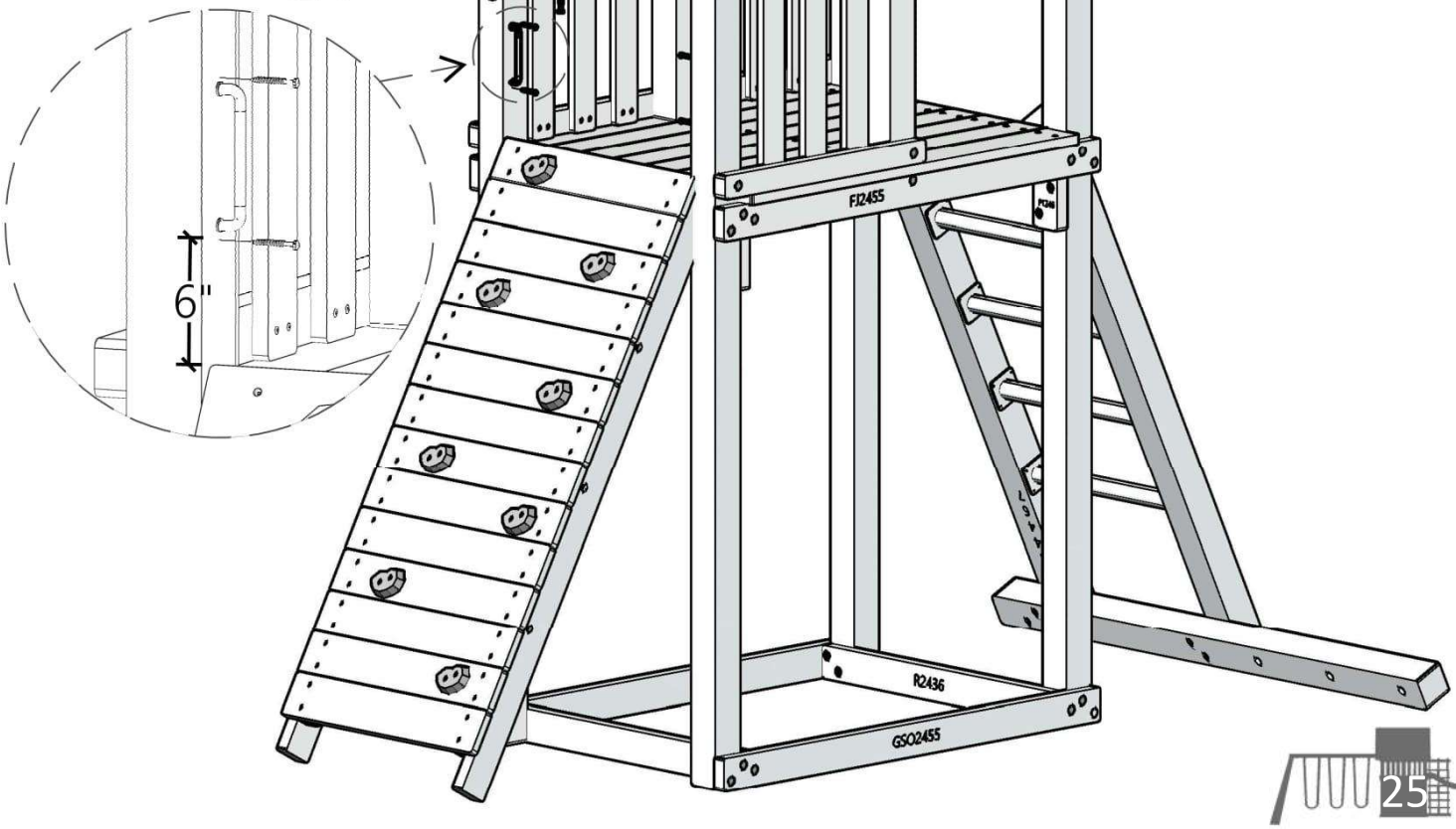

Step #17 Jacob's Ladder Dreamscape

- Using (6)-JL2426 Jacob Ladder Rungs and 3 ropes (16' sections).
- Thread 3 rope through Jacobs Ladder top rail JT 4465 and knot on the top. Thread 3 ropes through first JL2426 Jacobs Ladder rung and tie a knot approximately 12" down from top rail (as shown in drawing).

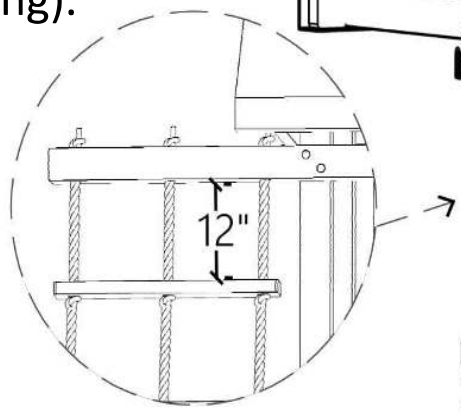

- Place ropes through JB4465 Jacobs Ladder Bottom Rail pull tight and tie knots. Cut off any excess rope and wrap ends the with electrical tape.

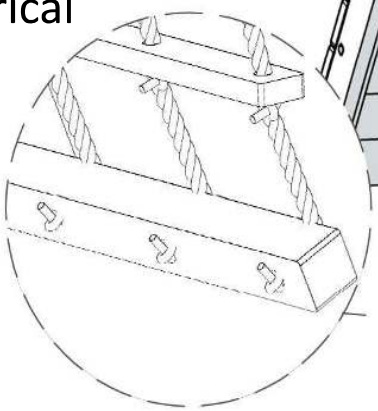

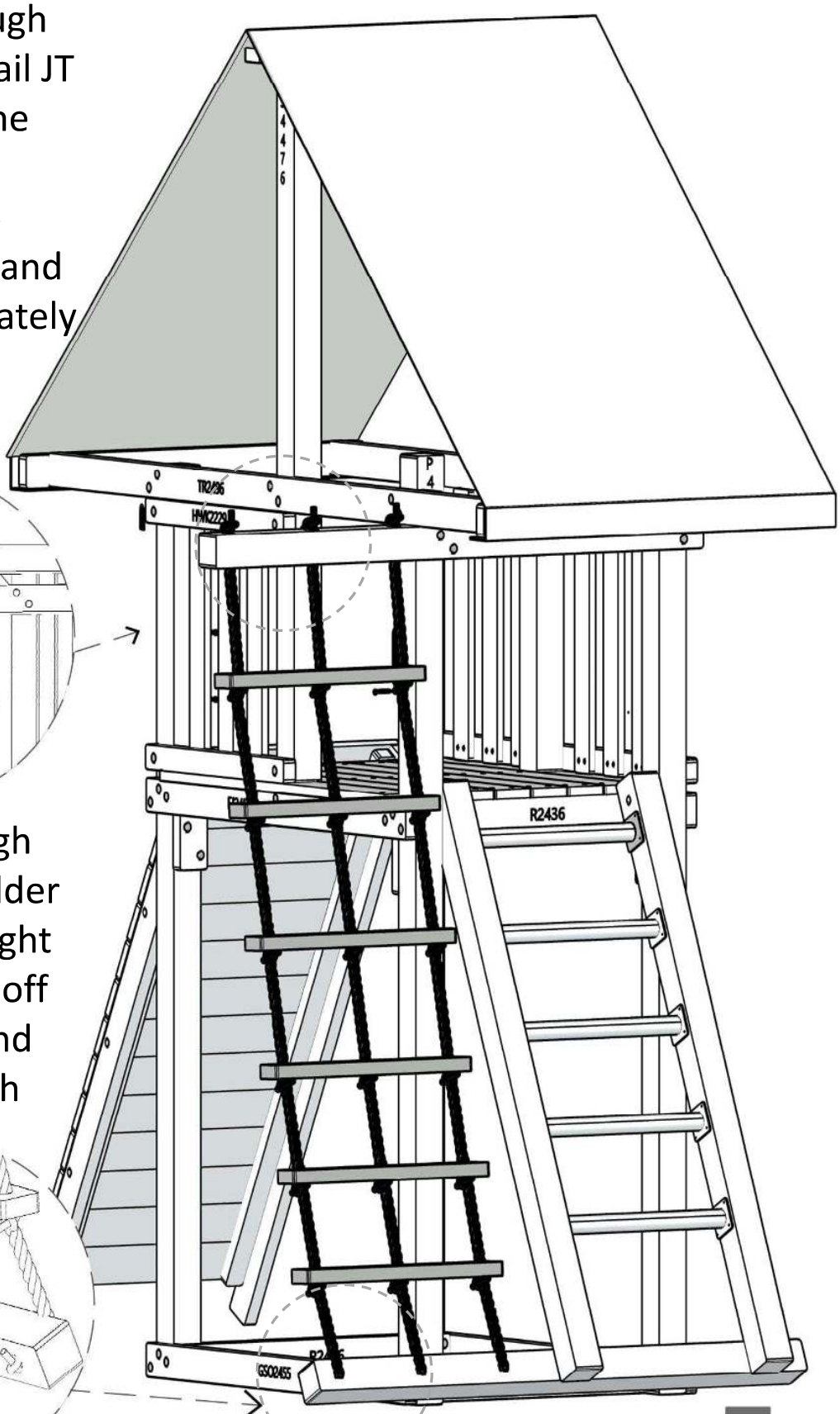

Step #18 Wave Slide Dreamscape

- Install SB2420 slide block under floor where slide opening is use S2 screws (as shown in drawing). Position slide in slide opening and install using S2 screws.

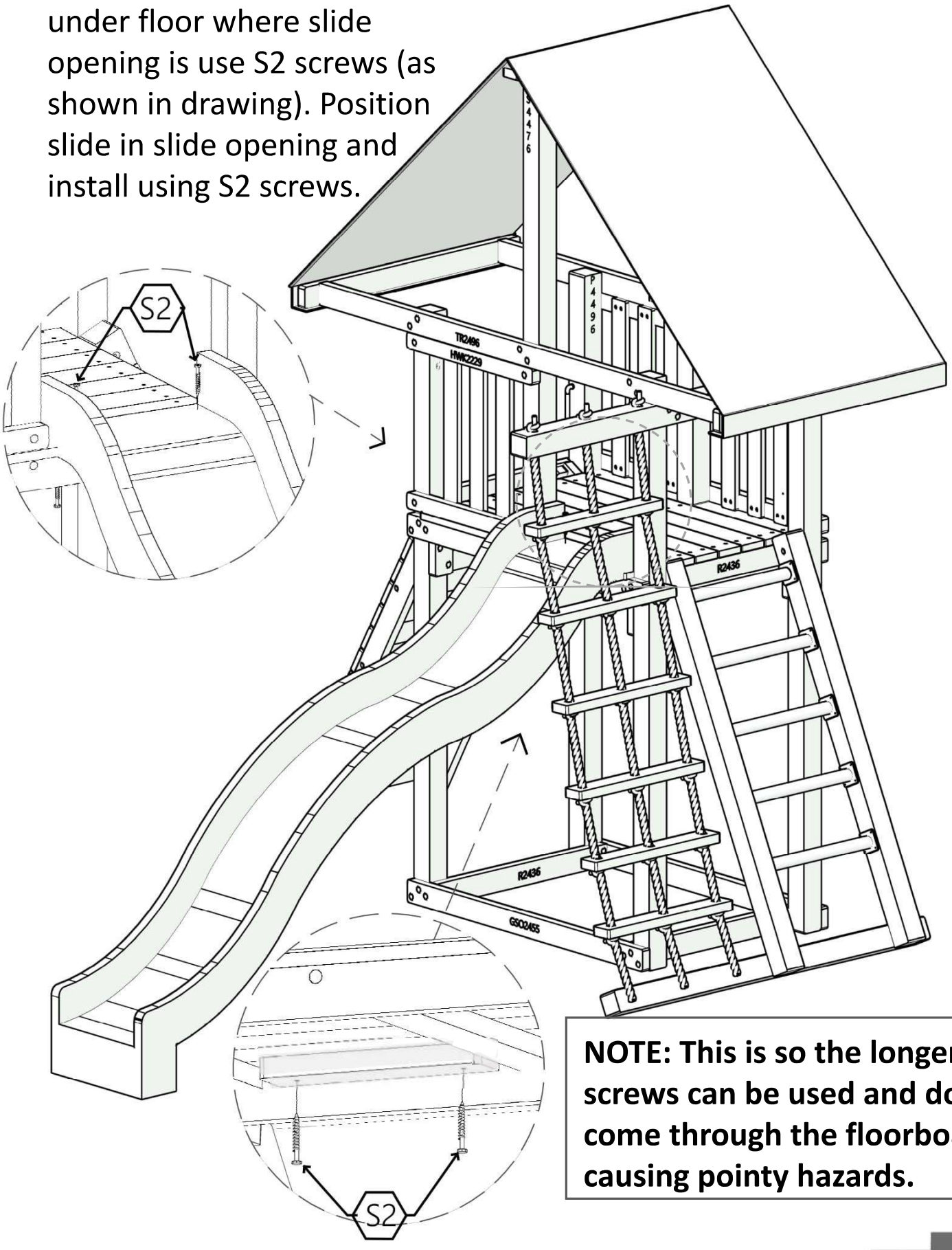

NOTE: This is so the longer screws can be used and do not come through the floorboards, causing pointy hazards.

Step #19 Swing Beam Assembly Dreamscape

- Place swing hangers on beam using hardware provided.

(12)-3/8 Hex Bolt (6½”)
(24)-3/8 Washer
(12)-3/8 Nut
(6)-Swing Hangers

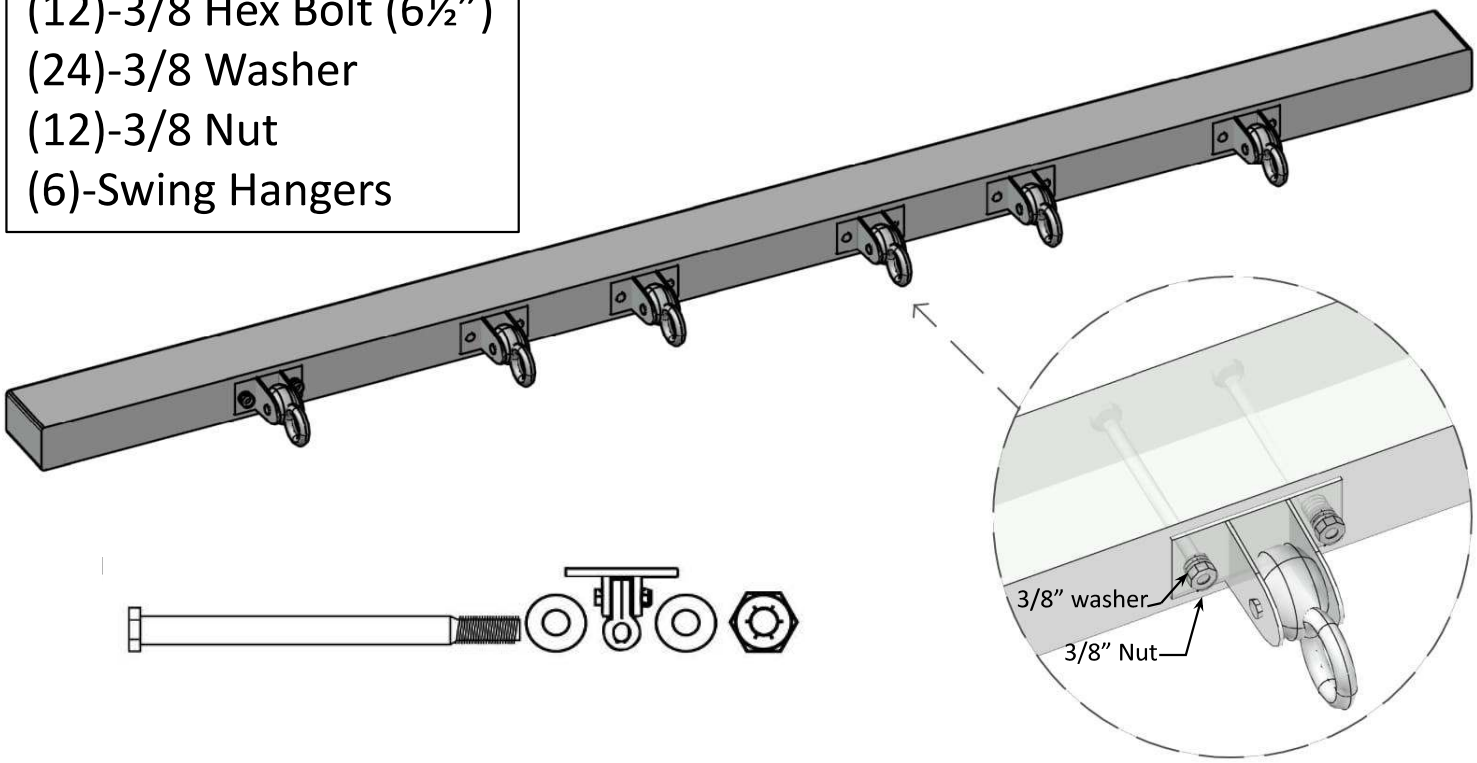

Step #20 Swing Beam Assembly Dreamscape

- Layout SBHG46120 slide **Easy 1-2-3 Bracket** onto beam. Predrill (3)-1/4” pilot holes. Attach bracket to post using B4 lag bolts. Repeat on opposite side.

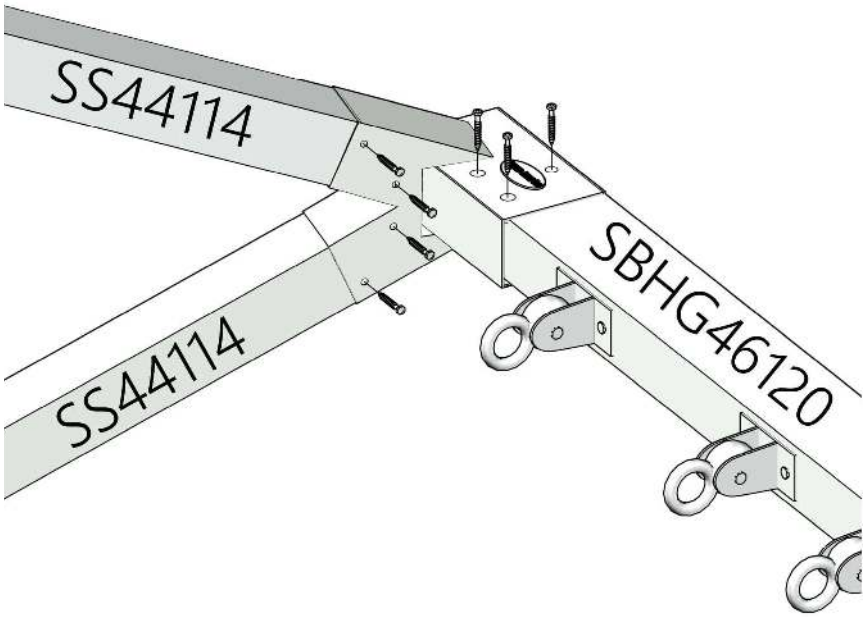

- Install (2)-SS44114 Posts into **Easy 1-2-3 Bracket**. Predrill (4)-1/4” pilot holes.

Note: Make sure swing hangers are facing down.

Step #21 Swing Beam Install Dreamscape

- Place swing beam on top rail of clubhouse. Level swing beam as needed by digging the side support legs into the ground.
- Install swing beam into TS4476 tent top support of clubhouse. Countersink two holes into the end of the beam using a 7/8” spade bit. Install using (2)-B5 Lag bolts. Repeat on the opposite side.

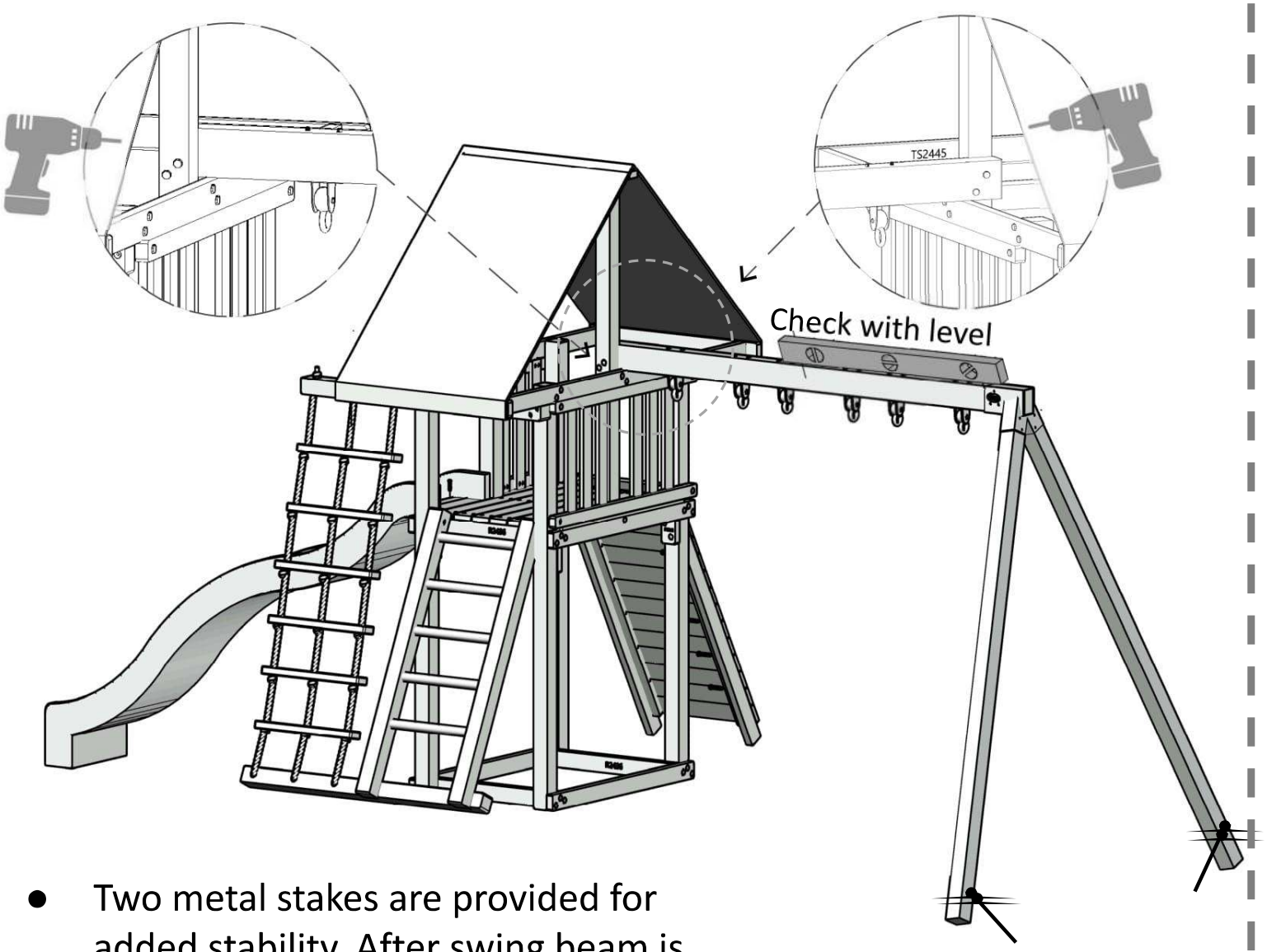

- Two metal stakes are provided for added stability. After swing beam is installed insert stakes into the ground flush with support legs. Leave 6” exposed and bolt to support using two B3 lag bolts.

Step #22 Accessory Installation Dreamscape

- Mount steering wheel on tent support post closest to the swings. Use the hardware provided.
- Mount telescope on ½ wall next to slide opening. Use the hardware provided.

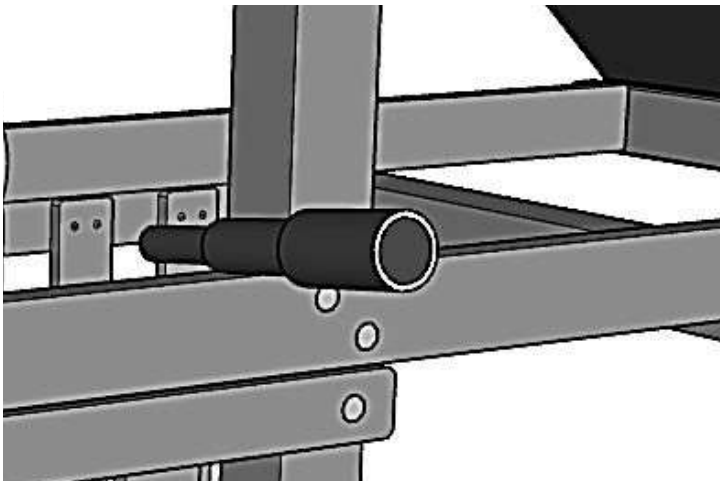

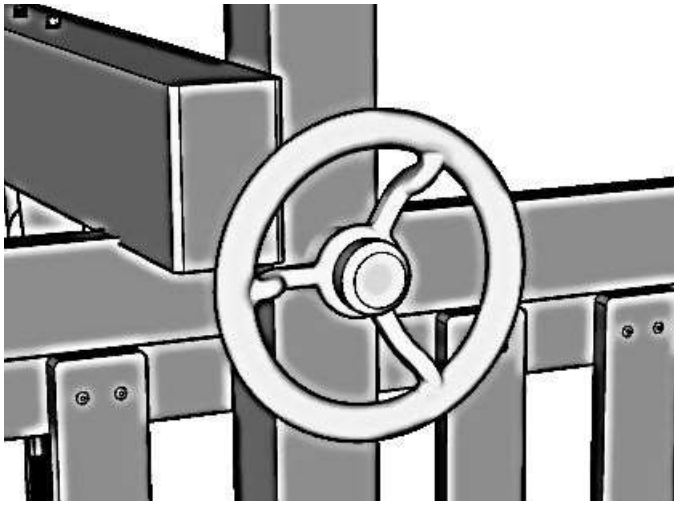

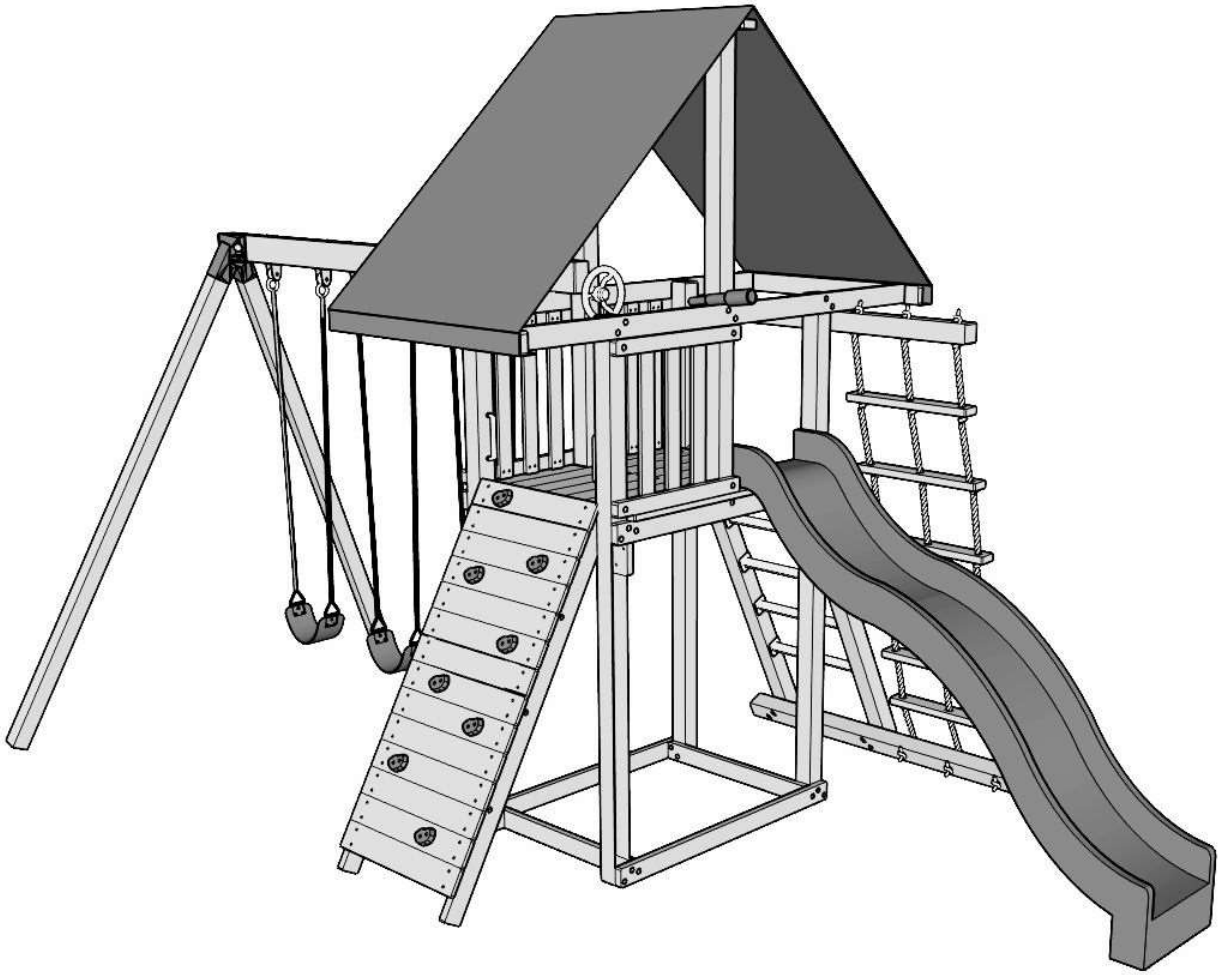

EASTERN JUNGLE GYM

10 year warranty

Eastern Jungle Gym® ("EJG") warrants all wooden components of its swing sets, under normal use and conditions, for a prorated period of 10 (TEN) years from the date of purchase. The warranty applies to the original purchaser at original address on sales receipt for the Classic, Dreamscape, Dream, Supreme (Oct 2015 and after), Supremescape, Ultimate, Extreme, Sky, Sky Tree House, Fantasy, Fantasy Tree House and Imagination swing sets. It warrants against structural failure from insect infestation or wood rot. It does not cover rot or decay that occurs as a result of installation of a swing set in an area with poor drainage.

Seasonal checks, minor cracking, knots, knot holes, peeling, warping, splintering, etc. are all considered natural characteristics and cosmetic imperfections of any wooden outdoor play equipment. They do not result in structural failure, and they are not covered under this warranty. Discoloration, mold growth and faded stain on the wooden components, as well as surface rust on hardware, are not considered defects and are not covered under the warranty.

Any components returned to EJG under this limited 10-year warranty must be sent freight prepaid and will be replaced or repaired at Eastern Jungle Gym's option. Returned components will be sent freight collect. Eastern Jungle Gym® reserves the right to examine photographs and/or physical evidence of merchandise claimed to be defective and to recover merchandise prior to any warranty claims. Any other cost associated with the work that must be performed on site is not covered. Any travel and labor or shipping and handling expenses will be the responsibility of the original purchaser. The warranty described thus far is the original purchaser's sole and exclusive remedy. It lasts for 10 years, or until the original customer sells or otherwise transfers the unit.

In addition to and separate from the above, all chains, rope, canopy tent tops, seats, hardware, metal braces, handles, rungs and all accessories will be free from defects in material and workmanship for a period of 1 (ONE) year from the date of purchase. Cracks in plastic components, as well as chips and imperfections in the powder-coated finishes, are not considered defects in workmanship or material if they do not affect the functionality of the component or the swing set, and as such will not be covered under this warranty. Any components returned to EJG under this limited one-year warranty will be replaced or repaired at Eastern Jungle Gym's option. Any cost associated with work that must be performed on-site is not covered, and neither are travel and labor or shipping and handling expenses. Those will be the responsibility of the original purchaser. The warranty described in this paragraph is the original purchaser's sole and exclusive remedy. It lasts for 1 year or until the original customer sells or otherwise transfers the unit.

Non-residential use of swing set or any swing set parts (including but not limited to chains, ropes, canopy tent tops, handles, etc.) is prohibited and will not be covered under any warranty, as Eastern Jungle Gym swing sets are designed for residential use ONLY. EJG reserves the right to examine photographs and/or physical evidence of merchandise claimed to be defective, and to recover merchandise prior to any warranty claims. Any merchandise returned for inspection must be sent freight prepaid, and will be returned freight collect, unless return authorization number is issued.

These warranties do not apply to any swing set or swing set part that has been subjected to abuse, vandalism, improper installation, negligence or acts of God. Warranties are void if any alterations or additions have been made to the swing set, or if it has been relocated by the customer or a third party.

These warranties are subject to the limitations stated herein. These warranties are expressly in lieu of all other warranties. They exclude all consequential damages. Some states do not allow the limitation or exclusion of consequential damages, so the above may not apply to you. Eastern Jungle Gym® does not authorize any individual or representative to express or imply any other warranty.

Notice: Failure to maintain your equipment properly may cause the warranties described herein not to apply in certain circumstances. It is the owner's responsibility to maintain the swing set, which includes but is not limited to hardware inspection and annual staining or sealing.

EASTERN JUNGLE GYM

Warranty Claim Process

IMPORTANT:

The wooden components in your Eastern Jungle Gym will have imperfections. We would like to remind you that seasonal checking, surface cracks, knots, knot holes are natural characteristics of all wooden swing sets. These imperfections that are not resulting in structural failure are NOT covered under this warranty.

After You have completed building your Eastern Jungle Gym completely and correctly , you may have a warranty claim. Please take the following step to insure a fast claim.

1) Write a brief letter describing any issues. With your name address and contact number.

2) Attach a copy of your sales receipt or other means of proof of purchase.

3) Provide a photo of the part or parts for your warranty claim and a photo of the complete set.

NOTE: Failure to follow these step may result in a delay of your claim.

Mail all information to:

Customer Service

Eastern Jungle Gym

30 Commerce Dr.

Carmel, NY 10512

Or email - info@easternjunglegym.com

A Eastern Jungle Gym customer service rep will contact you by phone or email after reviewing the claim approximately 24 - 48 hours. If a part is covered under warranty, you the customer will be responsible for shipping and handling.

Customer Service available 9-5pm EST Mon-Fri call 1-800-752-9787

EASTERN JUNGLE GYM

Commonly Asked Questions

Q: How do I know when hardware (screws, lags) are securely tightened?

A: You know when hardware is tight when the head of bolt washer or screw head are firmly against the wood. If you hear or see splintering this is an indication that you are over tightening your hardware.

Q: What should I do if a piece of hardware lines up with a knot or if the lag bolt should split?

A: There is extra hardware provided with the swing set for this reason. Re-drill a new hole with a 1/8" drill bit in a new direction to miss obstruction.

Q: What if my swing set has cracks on the wood or seems to be developing cracks?

A: Seasonal checks, surface cracks and knot holes are natural characteristics of all wooden swing sets. A check is a separation of the wood fibers running with the grain. This is caused by varying temperatures and moisture conditions. By coating your swing set with a sealant or preservative, will help protect your swing set from this (not stopping it.)

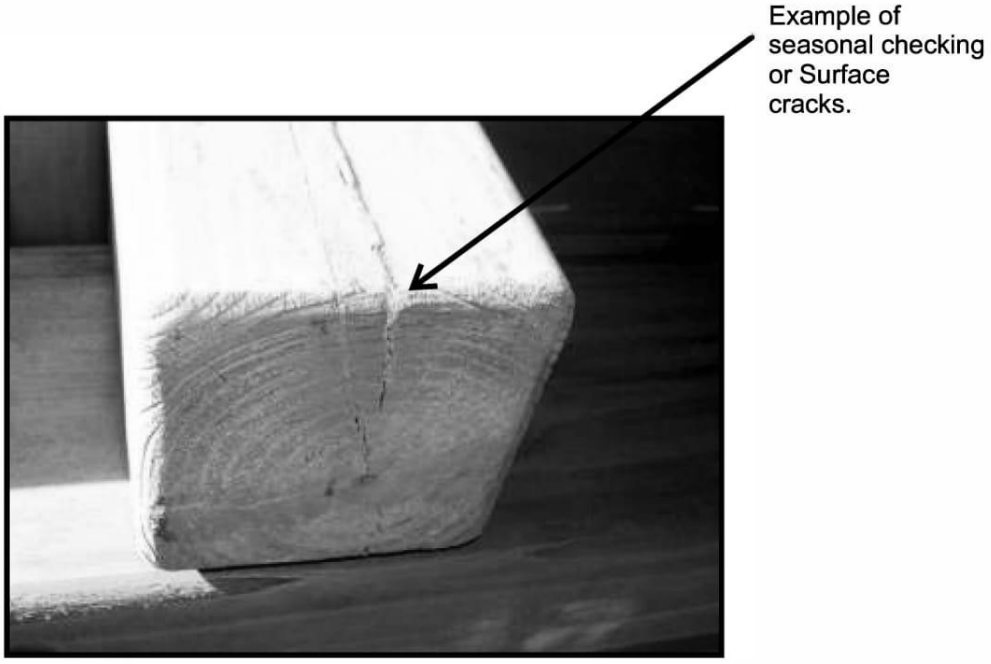

EASTERN JUNGLE GYM

Register Your Eastern Jungle Gym

Remove this page, fill it out and return it to

Eastern Jungle Gym
30 Commerce Dr.
Carmel, NY 10512

Name _____
Address _____
City _____
State _____
Zip Code _____
Phone Number _____

Where Purchased _____
City _____
State _____
Purchase Date _____

Product Satisfaction: ___ Excellent ___ Good ___ Fair ___Poor
Instruction Satisfaction: ___ Excellent ___ Good ___ Fair ___Poor
Comments: _____

_____

_____

_____

I have read the owners manual and understand my responsibility to maintain my swing set accordingly and to instruct my children of proper play and safety procedures. I also understand that all children that utilize my play system are to be supervised at all times.

Signature _____ Date _____

Order all your swing set accessories at www.easternjunglegym.com